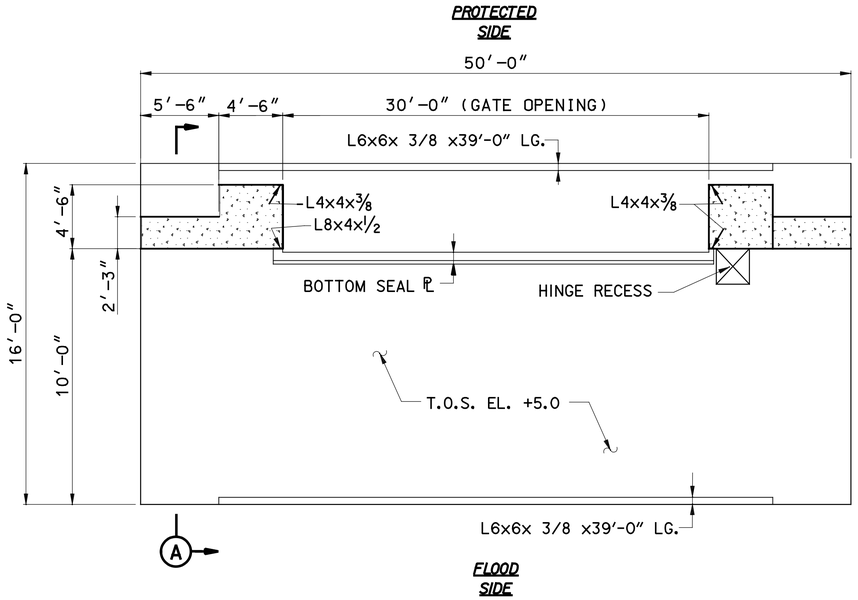

30-FT SWING GATE MONOLITH PILASTER & SEAL PLATE LAYOUT

SCALE: 3/16 " = 1'-0"

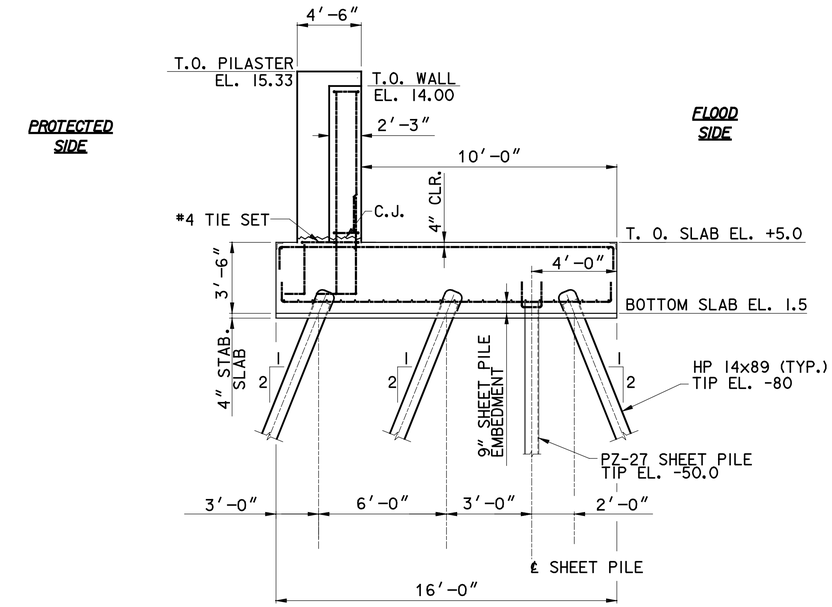

SECTION (A)

SCALE: 3/16 " = 1'-0"

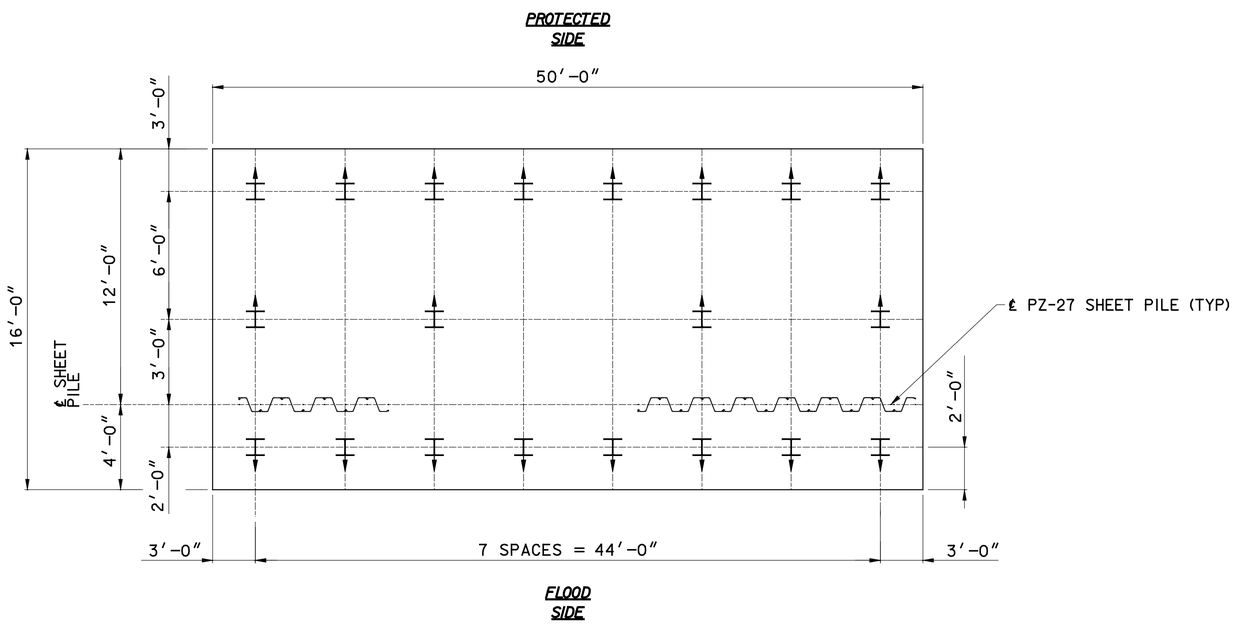

30-FT SWING GATE MONOLITH PILE LAYOUT

SCALE: 3/16 " = 1'-0"

NOTES:

1. STRUCTURAL CONCRETE: f'c = 4000 psi
2. Fy = 60 ksi
3. SEE DWG. S-16 FOR PILE DETAILS.
4. MONOLITH LENGTH SHOWN IN PLAN REPRESENTS THE DISTANCE MEASURED FROM CENTER LINE OF JOINT TO CENTER LINE OF JOINT.

LEGEND

HP14x89 PILE BATTERED IN DIRECTION OF ARROW, SEE MONOLITH DETAILS FOR BATTER

= WALL STEM

= PZ-27 SHEET PILE

SCALE: 3/16" = 1'- 0"

12" 0 5' 10' 15' 20'

US Army Corps of Engineers®
NEW ORLEANS DISTRICT

MARK	DESCRIPTION	DATE	APPR.	MARK	DESCRIPTION	DATE	APPR.

U.S. ARMY CORPS OF ENGINEERS
NEW ORLEANS DISTRICT
NEW ORLEANS, LOUISIANA

URS
3500 N. Causeway Blvd.
Suite 900
Metairie, Louisiana 70002
(504) 837-6326
PROJECT No. 10001520.00001

DESIGNED BY: L.B.R.
DWN BY: S.W.F.
CKD BY: RJG
SUBMITTED BY: ROY THOMAS
PLOT SCALE: 64
PLOT DATE: 7/24/2008
SIZE: ANSI D
FILE NAME:
DATE: 2/28/2008
SOLICITATION NO.: W912P8-00-B-XXXX
CONTRACT NO.: W912P8-07-D-0047
FILE NUMBER: H-NN-NNNNN

WEST BANK AND VICINITY, NEW ORLEANS, LOUISIANA
HURRICANE PROTECTION PROJECT
ENGINEERING ALTERNATIVE REPORT
FOR THE ENLARGEMENT OF HURRICANE PROTECTION
ALGIERS CANAL INDUSTRIAL REACH, PHASE 2
STA. 980+00 to STA. 1230+00
30' SWING GATE MONOLITH
ALTERNATIVE 1,2,3 &6

SHEET IDENTIFICATION
S-01

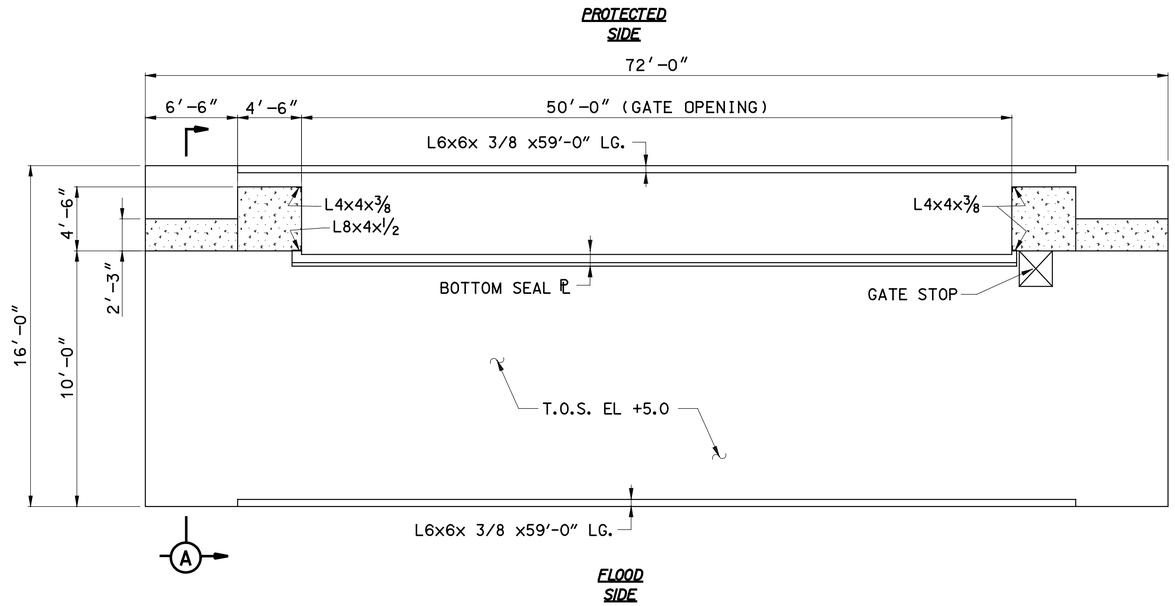

50-FT ROLLER GATE MONOLITH PILASTER & SEAL PLATE LAYOUT

SCALE: 3/16 " = 1'-0"

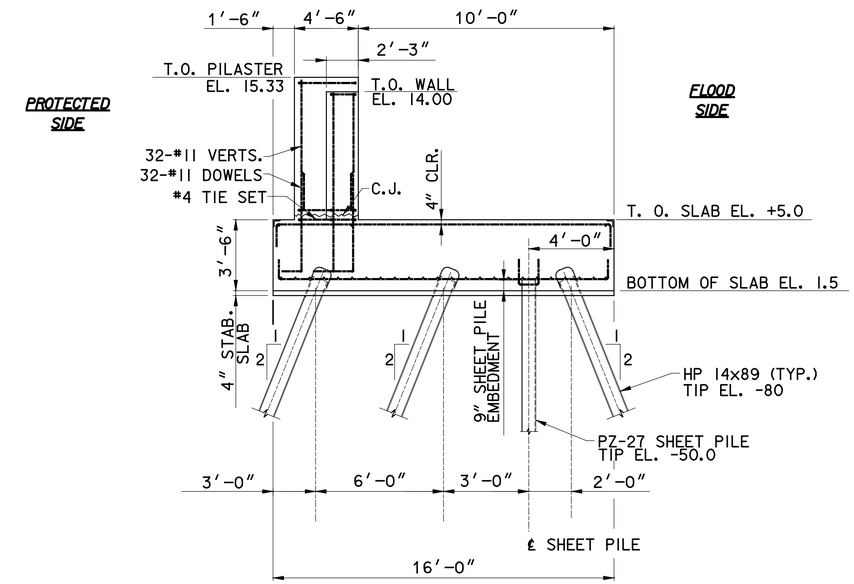

SECTION (A)

SCALE: 3/16 " = 1'-0"

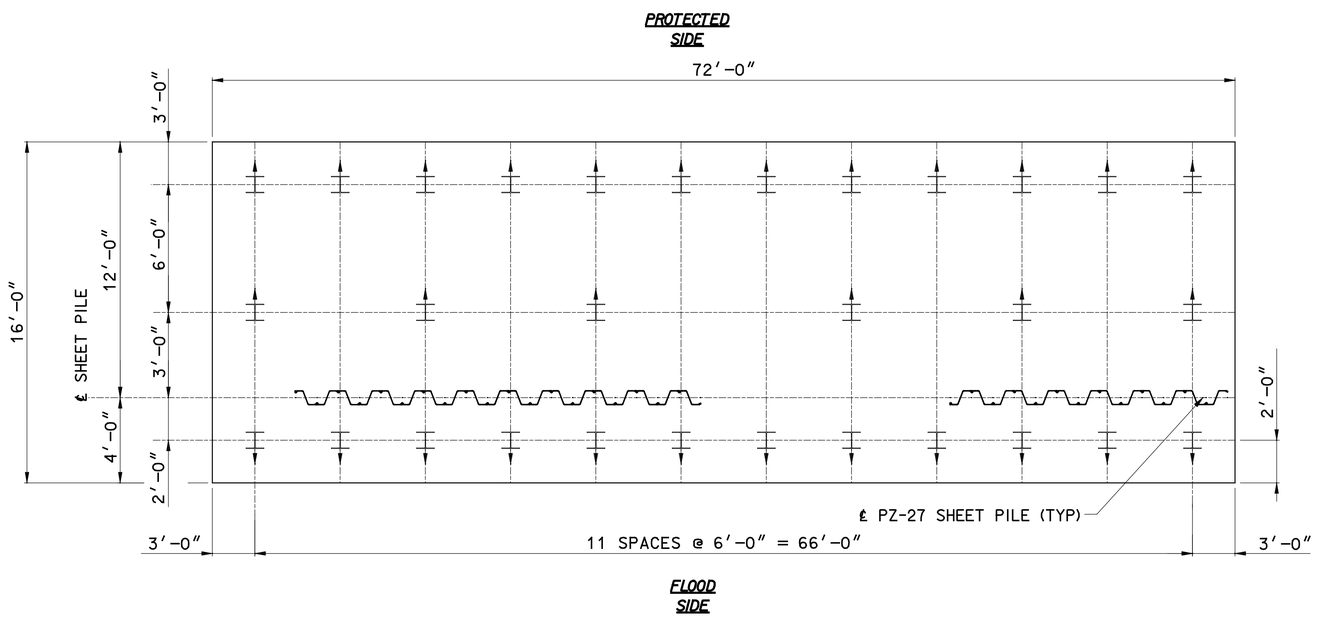

50-FT ROLLER GATE MONOLITH PILE LAYOUT

SCALE: 3/16 " = 1'-0"

NOTES:

1. STRUCTURAL CONCRETE: f'c = 4000 psi
2. Fy = 60 ksi
3. SEE DWG. S-16 FOR PILE DETAILS.
4. MONOLITH LENGTH SHOWN IN PLAN REPRESENTS THE DISTANCE MEASURED FROM CENTER LINE OF JOINT TO CENTER LINE OF JOINT.

LEGEND

HP14x89 PILE BATTERED IN DIRECTION OF ARROW, SEE MONOLITH DETAILS FOR BATTER

= WALL STEM

= PZ-27 SHEET PILE

SCALE: 3/16" = 1'- 0"

12" 0 5' 10' 15' 20'

US Army Corps of Engineers®
NEW ORLEANS DISTRICT

MARK	DESCRIPTION	DATE	APPR.

MARK	DESCRIPTION	DATE	APPR.

U.S. ARMY CORPS OF ENGINEERS
NEW ORLEANS DISTRICT
NEW ORLEANS, LOUISIANA

URS
3500 N. Causeway Blvd.
Suite 900
Metairie, Louisiana 70002
(504) 837-6326
PROJECT No. 10001520.00001

DESIGNED BY: L.B.R.
DWN BY: S.W.F.
CKD BY: R.J.G.
SUBMITTED BY: ROY THOMAS
PLOT SCALE: 64
PLOT DATE: 7/24/2008
SIZE: ANSI D
FILE NAME: s-02.dgn
DATE: 2/28/2008
SOLICITATION NO.: W912P8-00-B-XXXX
CONTRACT NO.: W912P8-07-D-0047
FILE NUMBER: H-NN-NNNNN

WEST BANK AND VICINITY, NEW ORLEANS, LOUISIANA
HURRICANE PROTECTION PROJECT
ENGINEERING ALTERNATIVE REPORT
FOR THE ENLARGEMENT OF HURRICANE PROTECTION
ALGIERS CANAL INDUSTRIAL REACH, PHASE 2
STA. 980+00 to STA. 1230+00
50' ROLLER GATE
ALTERNATIVE 1,2,3 & 6

SHEET IDENTIFICATION
S-02

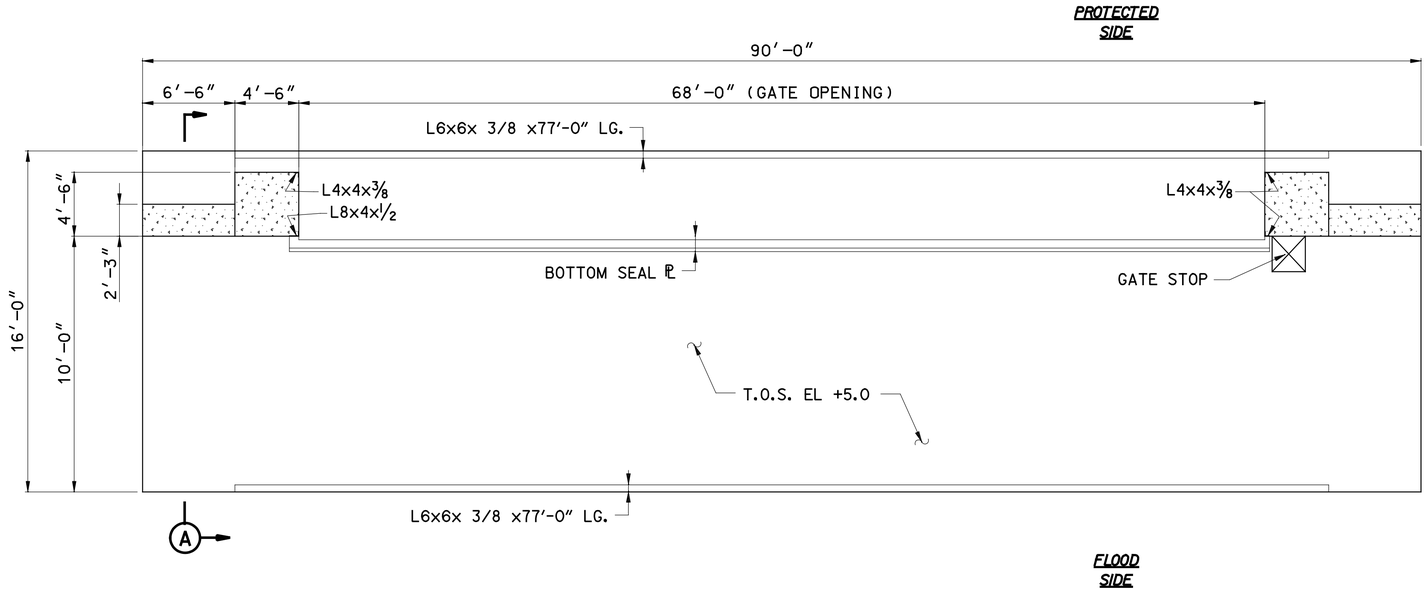

68-FT ROLLER GATE MONOLITH PILASTER & SEAL PLATE LAYOUT

SCALE: 3/16 " = 1'-0"

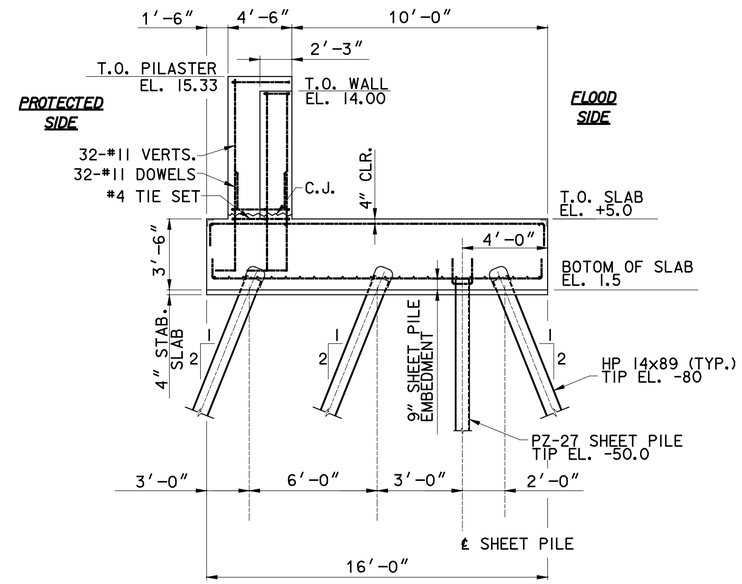

SECTION (A)

SCALE: 3/16 " = 1'-0"

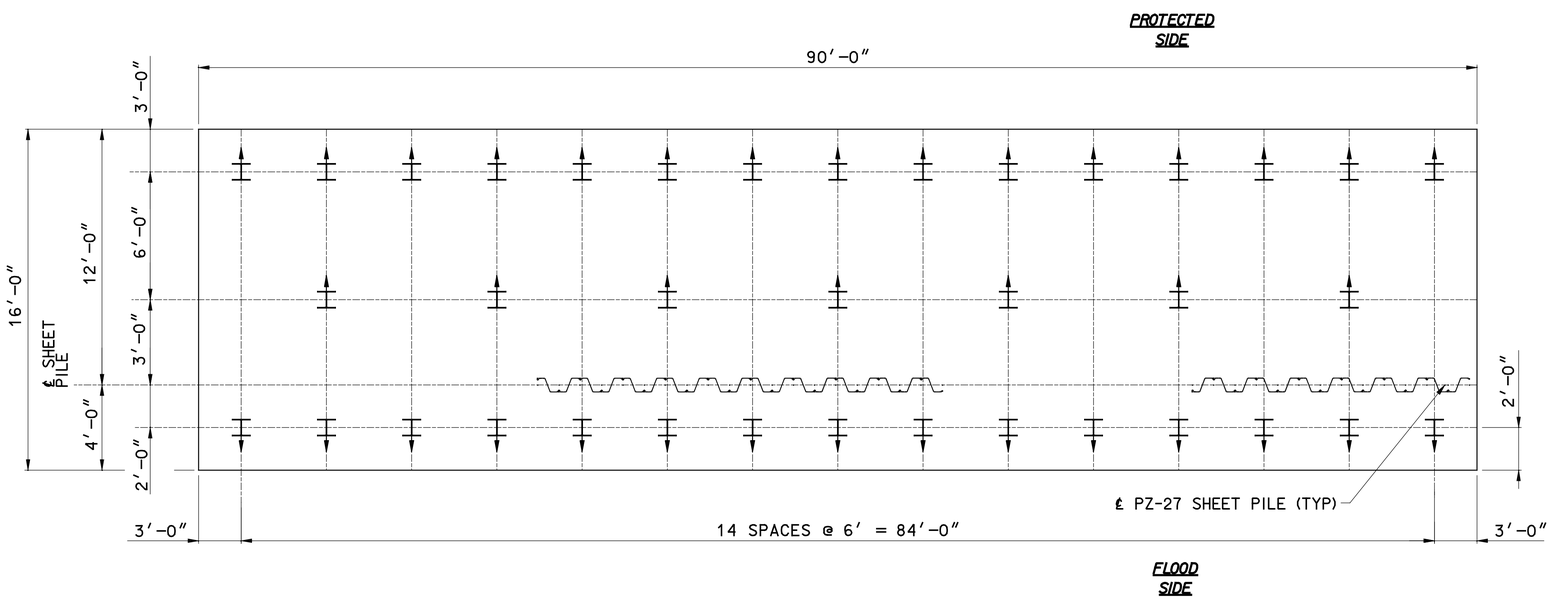

68-FT ROLLER GATE MONOLITH PILE LAYOUT

SCALE: 3/16 " = 1'-0"

NOTES:

1. STRUCTURAL CONCRETE: f'c = 4000 psi
2. Fy = 60 ksi
3. SEE DWG. S-16 FOR PILE DETAILS.
4. MONOLITH LENGTH SHOWN IN PLAN REPRESENTS THE DISTANCE MEASURED FROM CENTER LINE OF JOINT TO CENTER LINE OF JOINT.

LEGEND

HP14x89 PILE BATTERED IN DIRECTION OF ARROW, SEE MONOLITH DETAILS FOR BATTER

= WALL STEM

= PZ-27 SHEET PILE

SCALE: 1/16" = 1'- 0"

0 10' 20' 30' 40' 50'

US Army Corps of Engineers®
NEW ORLEANS DISTRICT

MARK	DESCRIPTION	DATE	APPR.	MARK	DESCRIPTION	DATE	APPR.

U.S. ARMY CORPS OF ENGINEERS
NEW ORLEANS DISTRICT
NEW ORLEANS, LOUISIANA

URS
3500 N. Causeway Blvd.
Suite 900
Metairie, Louisiana 70002
(504) 837-6326
PROJECT No. 10001520.00001

DESIGNED BY: L.B.R.
DWN BY:
CKD BY:
SUBMITTED BY: ROY THOMAS
PLOT SCALE: 64
PLOT DATE: 7/24/2008
SIZE: ANSI D
FILE NAME: s-03.dgn
DATE: 2/28/2008
SOLICITATION NO.: W912P8-00-B-XXXX
CONTRACT NO.: W912P8-07-D-0047
FILE NUMBER: H-NN-NNNNN

WEST BANK AND VICINITY, NEW ORLEANS, LOUISIANA
HURRICANE PROTECTION PROJECT
ENGINEERING ALTERNATIVE REPORT
FOR THE ENLARGEMENT OF HURRICANE PROTECTION
ALGIERS CANAL INDUSTRIAL REACH, PHASE 2
STA. 980+00 to STA. 1230+00
68' ROLLER GATE
ALTERNATIVE 1,2,3 & 6

SHEET IDENTIFICATION
S-03

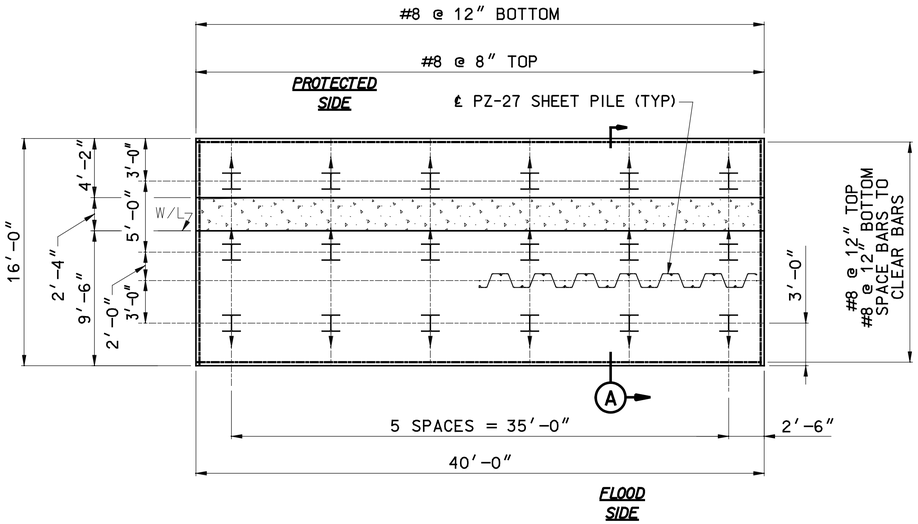

PLAN - TYPICAL MONOLITH

SCALE: 3/16 " = 1'-0"

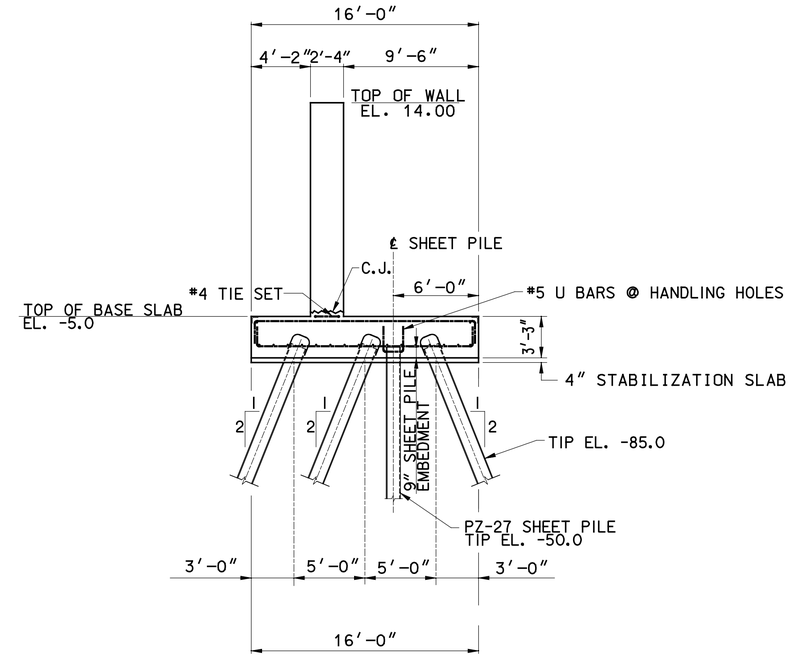

SECTION A

SCALE: 3/16 "=1'-0"

NOTES:

1. STRUCTURAL CONCRETE: f'c = 4000 psi
2. Fy = 60 ksi
3. SEE DWG. S-16 FOR PILE DETAILS.
4. MONOLITH LENGTH SHOWN IN PLAN REPRESENTS THE DISTANCE MEASURED FROM CENTER LINE OF JOINT TO CENTER LINE OF JOINT.

LEGEND

HP14x89 PILE BATTERED IN DIRECTION OF ARROW, SEE MONOLITH DETAILS FOR BATTER

= WALL STEM

= PZ-27 SHEET PILE

SCALE: 1/16" = 1'- 0"

0 10' 20' 30' 40' 50'

US Army Corps of Engineers®
NEW ORLEANS DISTRICT

MARK	DESCRIPTION	DATE	APPR.

MARK	DESCRIPTION	DATE	APPR.

U.S. ARMY CORPS OF ENGINEERS
NEW ORLEANS DISTRICT
NEW ORLEANS, LOUISIANA

URS
3500 N. Causeway Blvd.
Suite 900
Metairie, Louisiana 70002
(504) 837-8328
PROJECT No. 10001520.00001

DESIGNED BY: N.C.	DATE: 2/28/2008
DWN BY: S.W.F.	CKD BY: R.J.G.
SOLICITATION NO.: W912P8-00-B-XXXX	
SUBMITTED BY: ROY THOMAS	CONTRACT NO.: W912P8-07-D-0047
PLOT SCALE: As Shown	PLOT DATE: 7/24/2008
FILE NUMBER: H-NN-NNNNN	
SIZE: ANSI D	FILE NAME: s-04.dgn

WEST BANK AND VICINITY, NEW ORLEANS, LOUISIANA
HURRICANE PROTECTION PROJECT
ENGINEERING ALTERNATIVE REPORT
FOR THE ENLARGEMENT OF HURRICANE PROTECTION
ALGIERS CANAL INDUSTRIAL REACH, PHASE 2
STA. 980+00 to STA. 1230+00
TYPICAL T-WALL
ALTERNATIVE 4&5

SHEET IDENTIFICATION
S-04

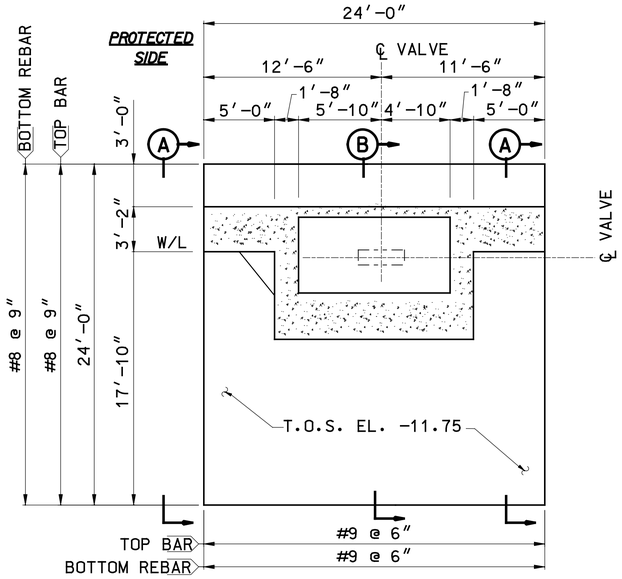

PLAN AT TOP OF BASE SLAB

SCALE: 3/16 " = 1'-0"

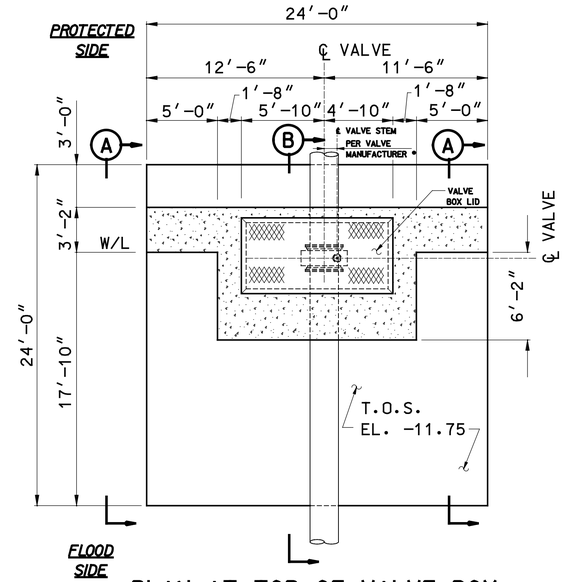

PLAN AT TOP OF VALVE BOX

SCALE: 3/16 " = 1'-0"

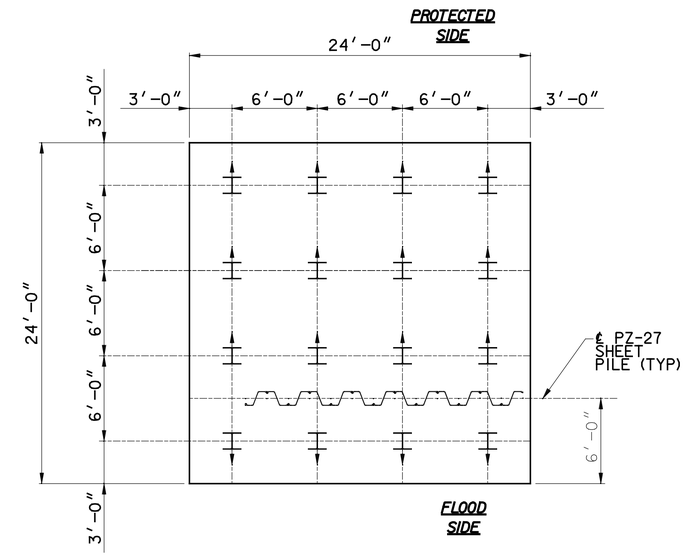

PILE PLAN

SCALE: 3/16 " = 1'-0"

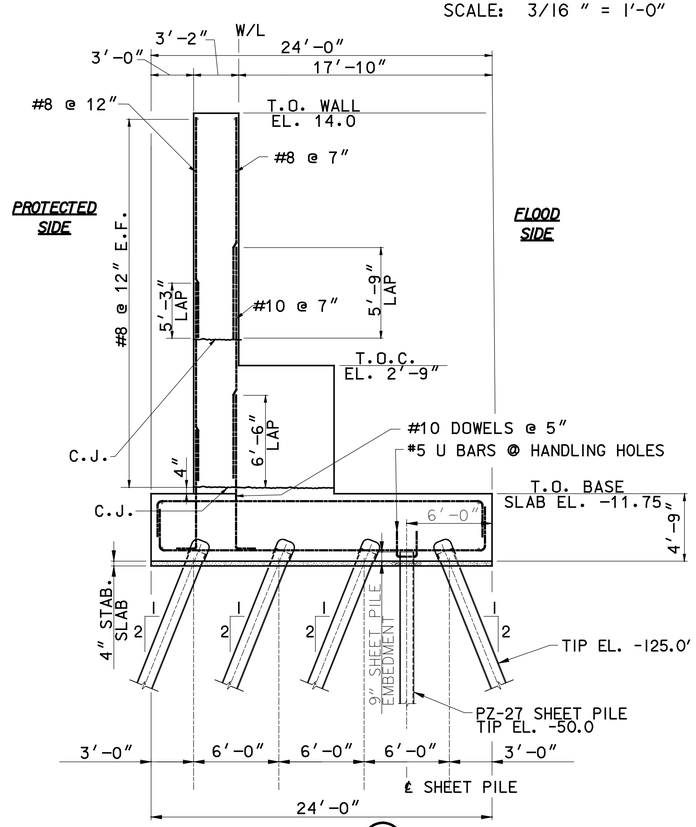

SECTION (A)

SCALE: 3/16 " = 1'-0"

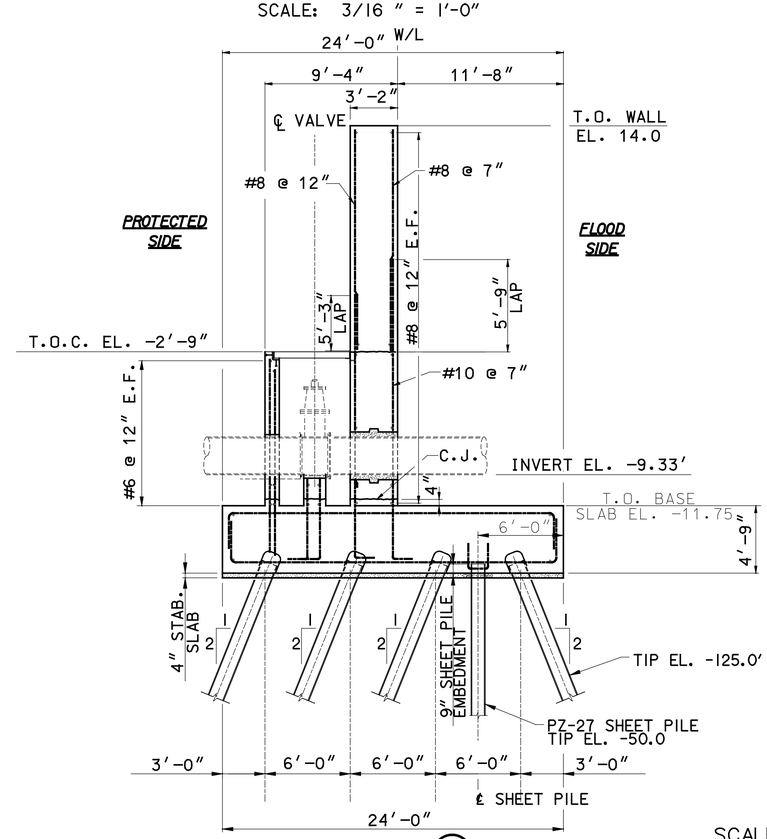

SECTION (B)

SCALE: 3/16 " = 1'-0"

NOTES:

1. STRUCTURAL CONCRETE: f'c = 4000 psi
2. Fy = 60 ksi
3. SEE DWG. S-16 FOR PILE DETAILS.
4. MONOLITH LENGTH SHOWN IN PLAN REPRESENTS THE DISTANCE MEASURED FROM CENTER LINE OF JOINT TO CENTER LINE OF JOINT.

LEGEND

HP14x89 PILE BATTERED IN DIRECTION OF ARROW, SEE MONOLITH DETAILS FOR BATTER

= WALL STEM

= PZ-27 SHEET PILE

SCALE: 1/16" = 1'- 0"

0 10' 20' 30' 40' 50'

US Army Corps of Engineers®
NEW ORLEANS DISTRICT

MARK	DESCRIPTION	DATE	APPR.	MARK	DESCRIPTION	DATE	APPR.

U.S. ARMY CORPS OF ENGINEERS
NEW ORLEANS DISTRICT
NEW ORLEANS, LOUISIANA

URS
3500 N. Causeway Blvd.
Suite 900
Metairie, Louisiana 70002
(504) 837-6325
PROJECT No: 100015200.00001

DESIGNED BY: N.S.		DATE: 2/28/2008	
DWN BY: B.M.F.	CKD BY: R.J.G.	SOLICITATION NO.: W912PB-09-B-XXXX	
SUBMITTED BY: ROY THOMAS		CONTRACT NO.: W912PB-07-D-0047	
PLOT SCALE: 1:1	PLOT DATE: 2/28/2008	FILE NUMBER: H-NN-NNNNNN	
SIZE: ANSI D	FILE NAME: s-05.dgn		

WEST BANK AND VICINITY, NEW ORLEANS, LOUISIANA
HURRICANE PROTECTION PROJECT
ENGINEERING ALTERNATIVE REPORT
FOR THE ENLARGEMENT OF HURRICANE PROTECTION
ALGIERS CANAL INDUSTRIAL REACH, PHASE 2
STA. 980+00 to STA. 1230+00
DRAINAGE MONOLITH
ALTERNATIVE 4&5

SHEET IDENTIFICATION
S-05

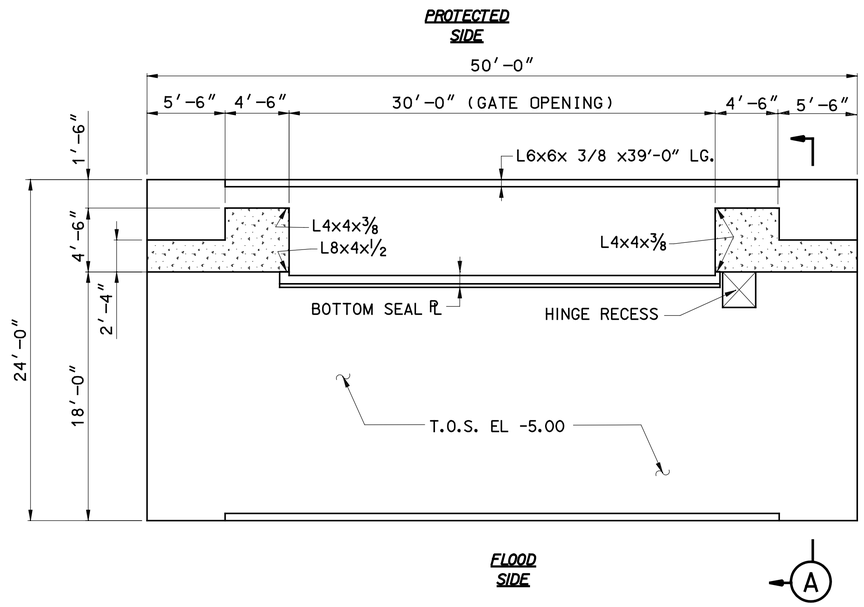

30-FT SWING GATE MONOLITH PILASTER & SEAL PLATE LAYOUT

SCALE: 3/16 " = 1'-0"

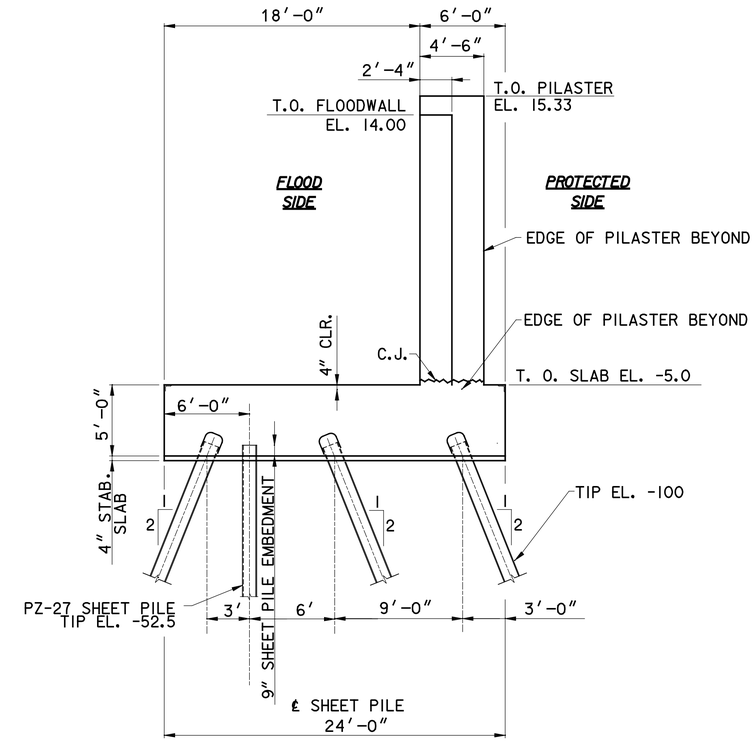

SECTION (A)

SCALE: 3/16 " = 1'-0"

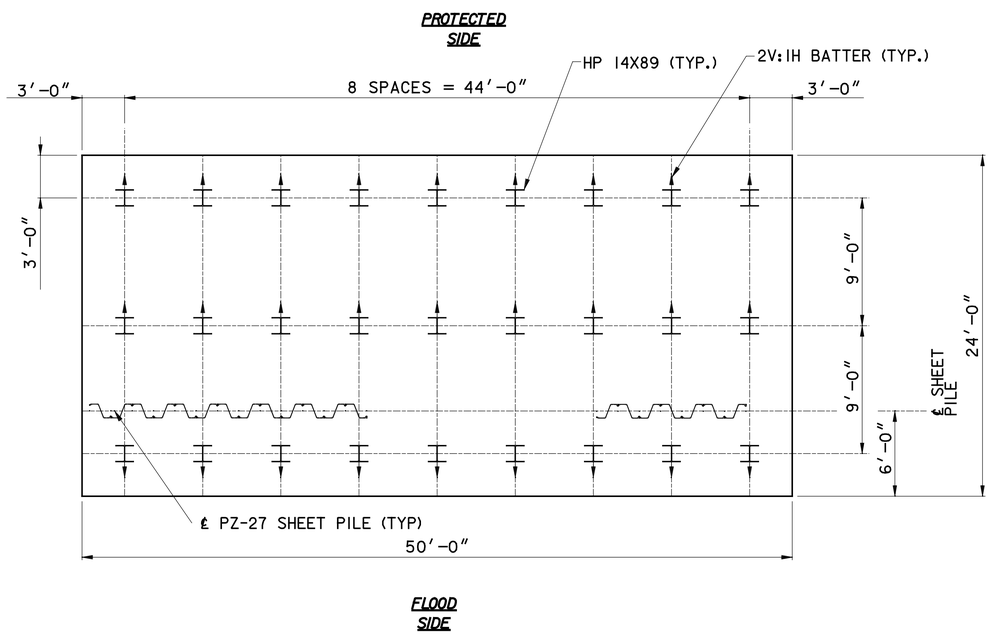

30-FT SWING GATE MONOLITH PILE LAYOUT

SCALE: 3/16 " = 1'-0"

NOTES:

1. STRUCTURAL CONCRETE: f'c = 4000 psi
2. Fy = 60 ksi
3. SEE DWG. S-16 FOR PILE DETAILS.
4. MONOLITH LENGTH SHOWN IN PLAN REPRESENTS THE DISTANCE MEASURED FROM CENTER LINE OF JOINT TO CENTER LINE OF JOINT.

LEGEND

HP14x89 PILE BATTERED IN DIRECTION OF ARROW, SEE MONOLITH DETAILS FOR BATTER

= WALL STEM

= PZ-27 SHEET PILE

SCALE: 1/16" = 1'- 0"

0 10' 20' 30' 40' 50'

US Army Corps of Engineers®
NEW ORLEANS DISTRICT

MARK	DESCRIPTION	DATE	APPR.

MARK	DESCRIPTION	DATE	APPR.

U.S. ARMY CORPS OF ENGINEERS
NEW ORLEANS DISTRICT
NEW ORLEANS, LOUISIANA

URS 3500 N. Causeway Blvd. Suite 900 Metairie, Louisiana 70002 (504) 837-8328
PROJECT No. 10001520.00001

DESIGNED BY: N.C.	DATE: 2/28/2008
DWN BY: S.W.F.	CKD BY: R.J.G.
SOLICITATION NO.: W912P8-00-B-XXXX	
SUBMITTED BY: ROY THOMAS	CONTRACT NO.: W912P8-07-D-0047
PLOT SCALE: AS SHOWN	PLOT DATE: 7/24/2008
FILE NUMBER: H-NN-NNNNN	
SIZE: ANSI D	FILE NAME: s-06.dgn

WEST BANK AND VICINITY, NEW ORLEANS, LOUISIANA
HURRICANE PROTECTION PROJECT
ENGINEERING ALTERNATIVE REPORT
FOR THE ENLARGEMENT OF HURRICANE PROTECTION
ALGIERS CANAL INDUSTRIAL REACH, PHASE 2
STA. 980+00 to STA. 1230+00
30' SWING GATE
ALTERNATIVE 4&5

SHEET IDENTIFICATION
S-06

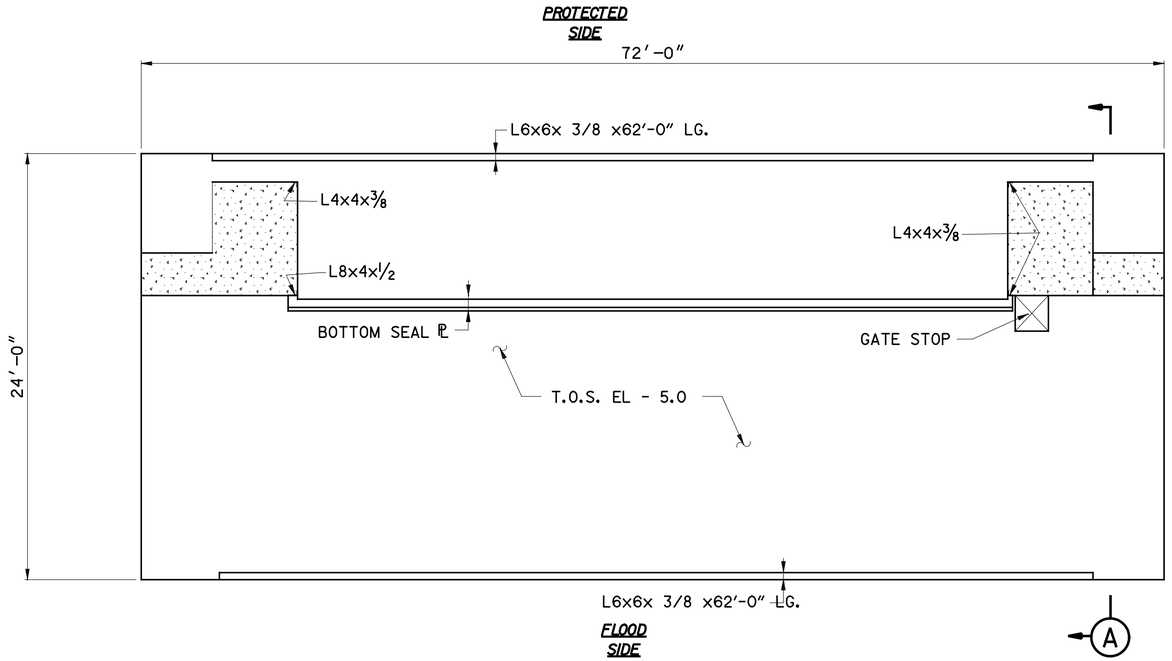

50-FT ROLLER GATE MONOLITH PILASTER & SEAL PLATE LAYOUT

SCALE: 3/16 " = 1'-0"

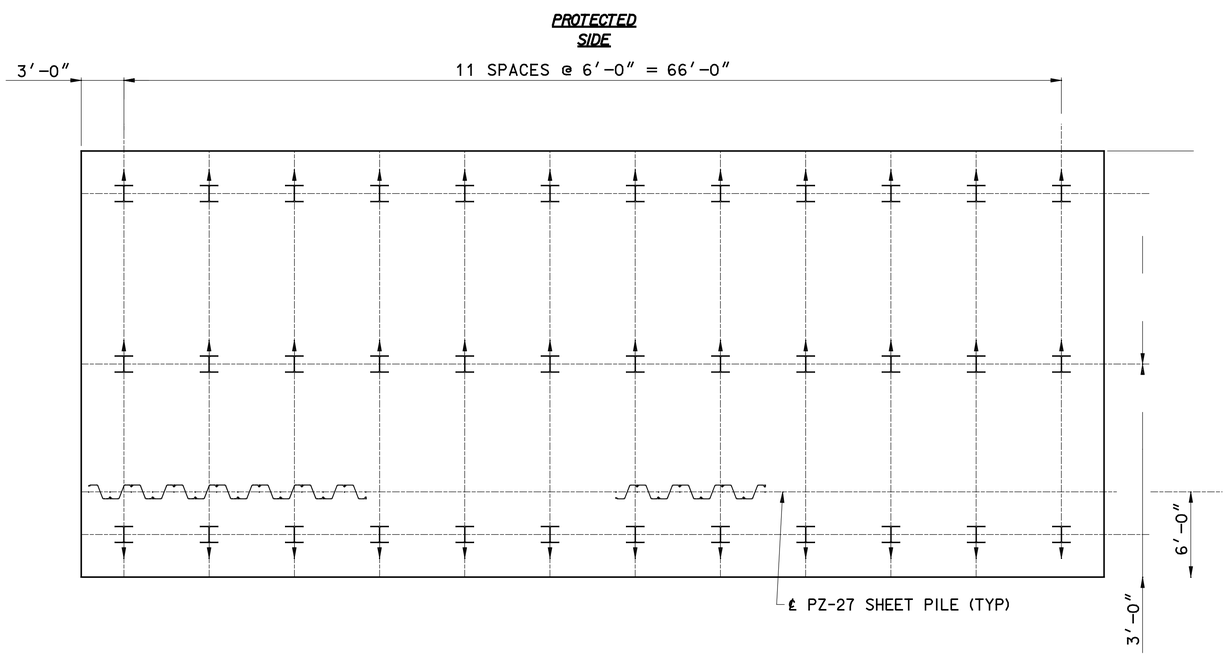

50-FT ROLLER GATE MONOLITH PILE LAYOUT

SCALE: 3/16 " = 1'-0"

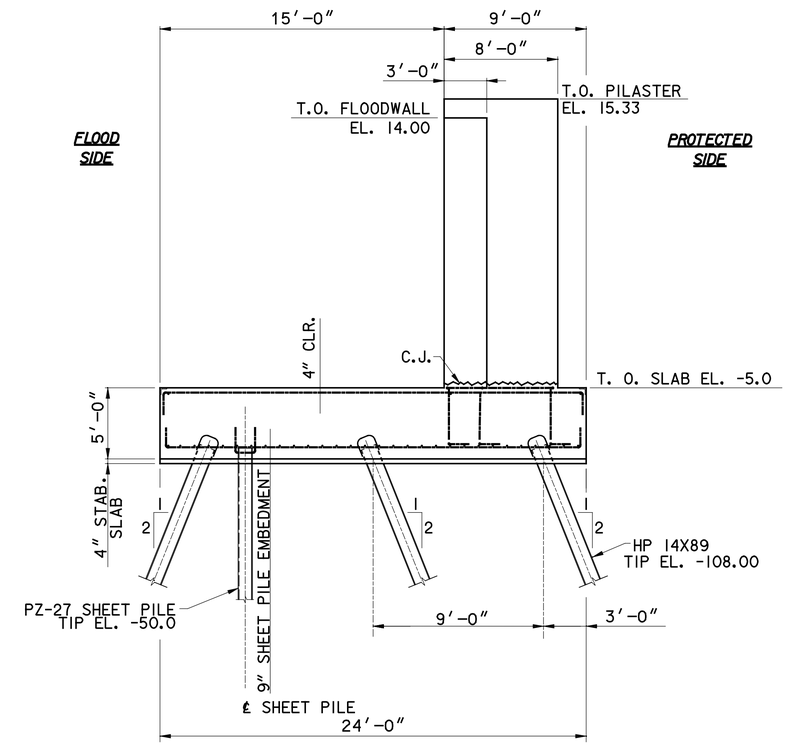

SECTION A

SCALE: 3/16 " = 1'-0"

NOTES:

1. STRUCTURAL CONCRETE: f'c = 4000 psi
2. Fy = 60 ksi
3. SEE DWG. S-16 FOR PILE DETAILS.
4. MONOLITH LENGTH SHOWN IN PLAN REPRESENTS THE DISTANCE MEASURED FROM CENTER LINE OF JOINT TO CENTER LINE OF JOINT.

LEGEND

HP14x89 PILE BATTERED IN DIRECTION OF ARROW, SEE MONOLITH DETAILS FOR BATTER

= WALL STEM

= PZ-27 SHEET PILE

SCALE: 1/16" = 1'- 0"

0 10' 20' 30' 40' 50'

US Army Corps of Engineers®
NEW ORLEANS DISTRICT

MARK	DESCRIPTION	DATE	APPR.

MARK	DESCRIPTION	DATE	APPR.

U.S. ARMY CORPS OF ENGINEERS
NEW ORLEANS DISTRICT
NEW ORLEANS, LOUISIANA

URS
3500 N. Causeway Blvd.
Suite 900
Metairie, Louisiana 70002
(504) 837-4308
PROJECT No. 10001520.00001

DESIGNED BY: N.S.	DATE: 2/28/2008
DWN BY: S.W.F.	CKD BY: B.B.B.
SUBMITTED BY: ROY THOMAS	SOLICITATION NO.: W912P8-00-B-XXXX
PLOT SCALE: 1:1	PLOT DATE: 7/24/2009
SIZE: ANSI D	FILE NAME: s-07.dgn
CONTRACT NO.: W912P8-07-D-0047	
FILE NUMBER: H-NN-NNNNN	

WEST BANK AND VICINITY, NEW ORLEANS, LOUISIANA
HURRICANE PROTECTION PROJECT
ENGINEERING ALTERNATIVE REPORT
FOR THE ENLARGEMENT OF HURRICANE PROTECTION
ALGIERS CANAL INDUSTRIAL REACH, PHASE 2
STA. 980+00 to STA. 1230+00
50' ROLLER GATE
ALTERNATIVE 4 AND 5

SHEET IDENTIFICATION
S-07

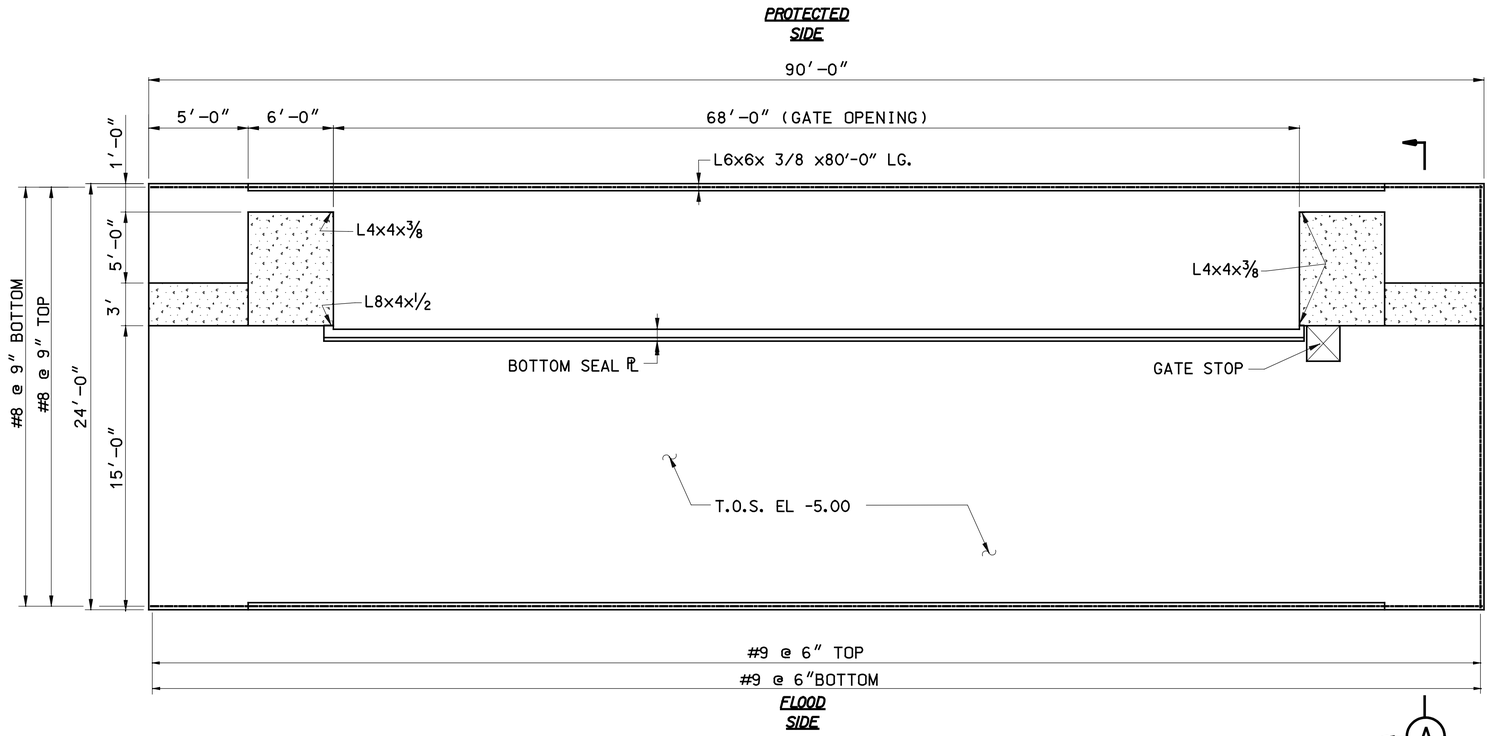

68-FT ROLLER GATE MONOLITH PILASTER & SEAL PLATE LAYOUT

SCALE: 3/16 " = 1'-0"

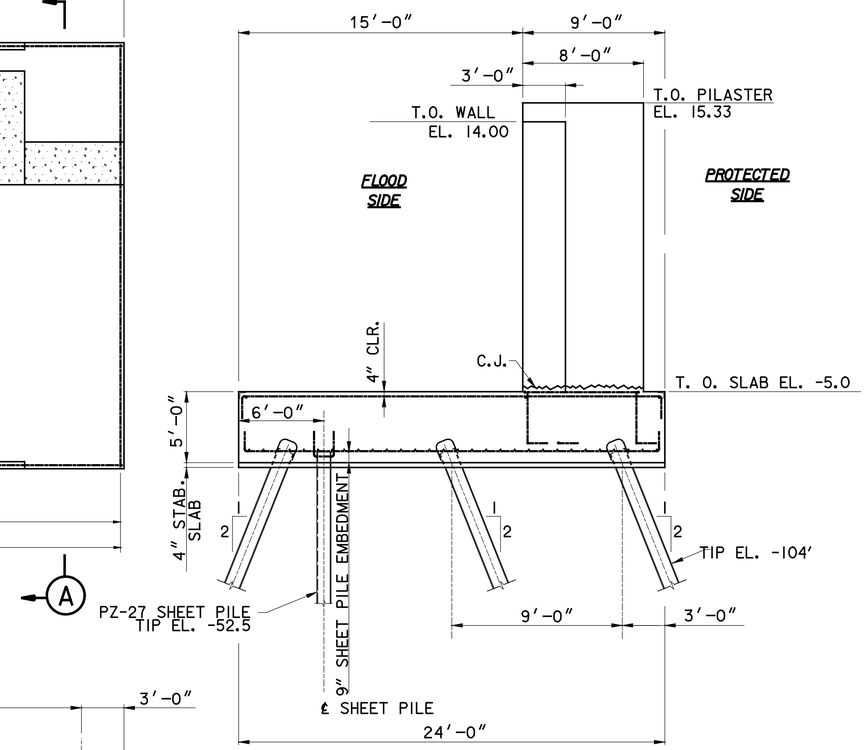

SECTION (A)

SCALE: 3/16 " = 1'-0"

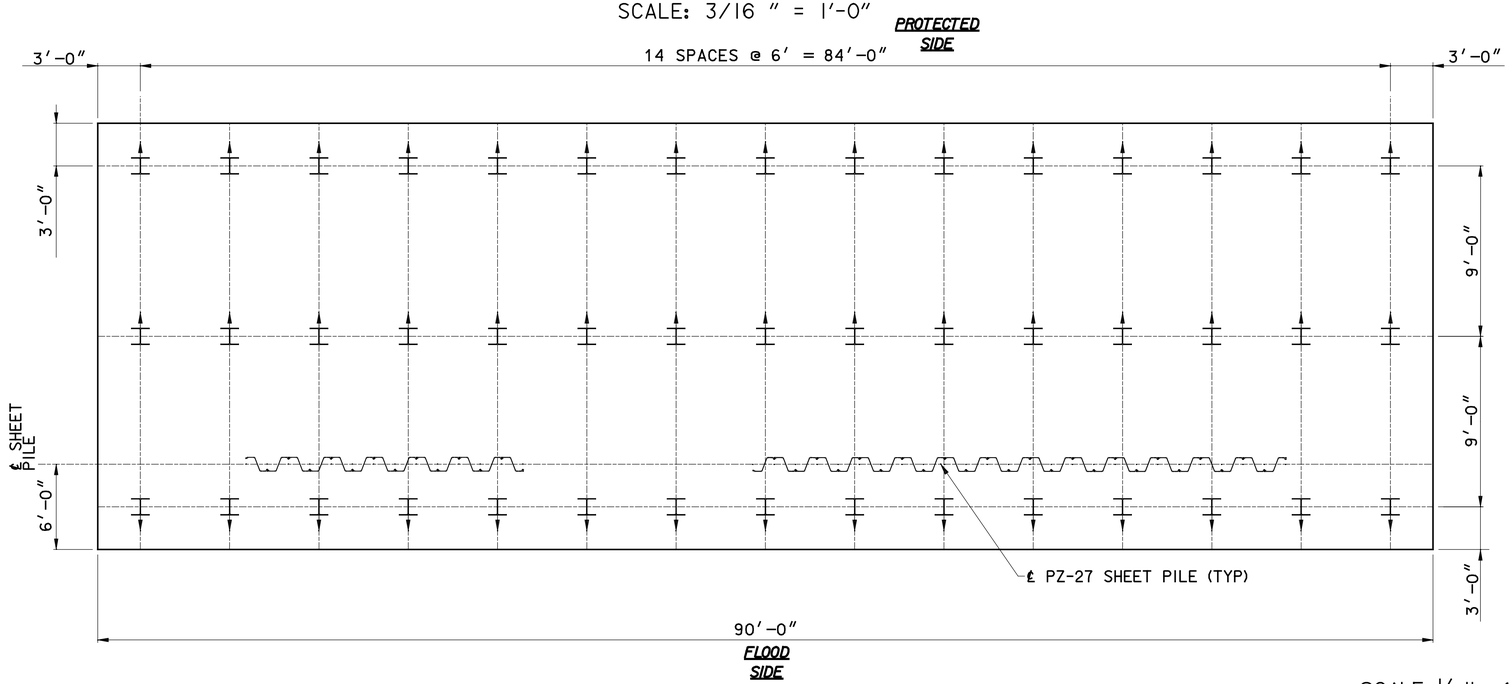

68-FT ROLLER GATE MONOLITH PILE LAYOUT

SCALE: 3/16 " = 1'-0"

SCALE: 1/16" = 1'- 0"

0 10' 20' 30' 40' 50'

NOTES:

1. STRUCTURAL CONCRETE: f'c = 4000 psi
2. Fy = 60 ksi
3. SEE DWG. S-16 FOR PILE DETAILS.
4. MONOLITH LENGTH SHOWN IN PLAN REPRESENTS THE DISTANCE MEASURED FROM CENTER LINE OF JOINT TO CENTER LINE OF JOINT.

LEGEND

HP14x89 PILE BATTERED IN DIRECTION OF ARROW, SEE MONOLITH DETAILS FOR BATTER

= WALL STEM

= PZ-27 SHEET PILE

US Army Corps of Engineers®
NEW ORLEANS DISTRICT

MARK	DESCRIPTION	DATE	APPR.

MARK	DESCRIPTION	DATE	APPR.

U.S. ARMY CORPS OF ENGINEERS
NEW ORLEANS DISTRICT
NEW ORLEANS, LOUISIANA

URS
3500 N. Causeway Blvd.
Suite 900
Metairie, Louisiana 70002
(504) 837-6326
PROJECT No. 10001520.00001

DESIGNED BY: NC
DWN BY: S.W.F.
CKD BY: R.J.G.
SUBMITTED BY: ROY THOMAS
PLOT SCALE: 64
PLOT DATE: 7/24/2008
SIZE: ANSI D
FILE NAME: s-08.dgn
DATE: 2/28/2008
SOLICITATION NO.: W912P8-00-B-XXXX
CONTRACT NO.: W912P8-07-D-0047
FILE NUMBER: H-NN-NNNNN

WEST BANK AND VICINITY, NEW ORLEANS, LOUISIANA
HURRICANE PROTECTION PROJECT
ENGINEERING ALTERNATIVE REPORT
FOR THE ENLARGEMENT OF HURRICANE PROTECTION
ALGIERS CANAL INDUSTRIAL REACH, PHASE 2
STA. 980+00 to STA. 1230+00
68' ROLLER GATE
ALTERNATIVE 4 & 5

SHEET IDENTIFICATION
S-08

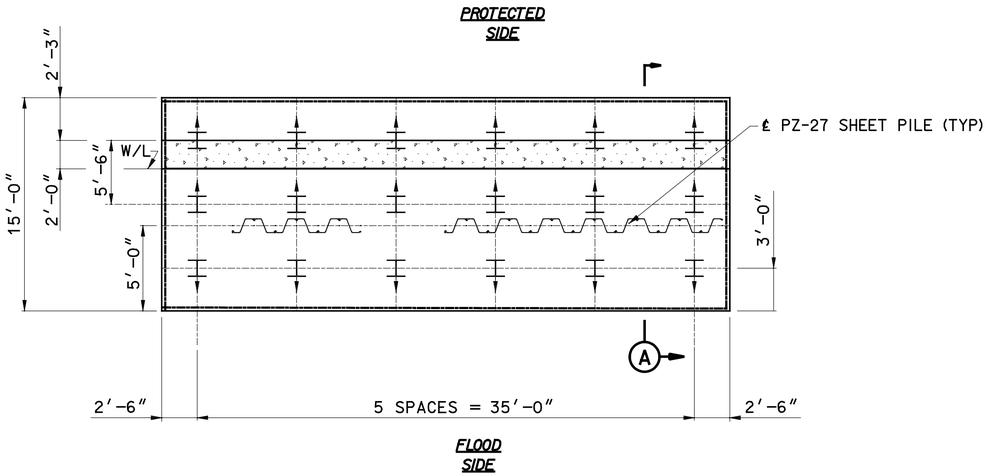

PLAN - TYPICAL MONOLITH

SCALE: 3/16 " = 1'-0"

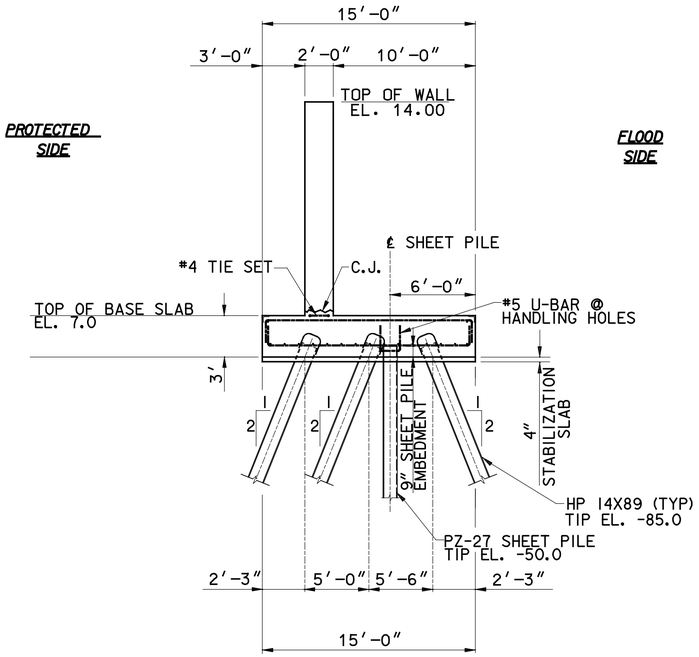

SECTION (A)

SCALE: 3/16 "=1'-0"

NOTES:

1. STRUCTURAL CONCRETE: f'c = 4000 psi
2. Fy = 60 ksi
3. SEE DWG. S-16 FOR PILE DETAILS.
4. MONOLITH LENGTH SHOWN IN PLAN REPRESENTS THE DISTANCE MEASURED FROM CENTER LINE OF JOINT TO CENTER LINE OF JOINT.

LEGEND

HP14x89 PILE BATTERED IN DIRECTION OF ARROW, SEE MONOLITH DETAILS FOR BATTER

= WALL STEM

= PZ-27 SHEET PILE

SCALE: 1/16" = 1'- 0"

0 10' 20' 30' 40' 50'

US Army Corps of Engineers®
NEW ORLEANS DISTRICT

MARK	DESCRIPTION	DATE	APPR.	MARK	DESCRIPTION	DATE	APPR.

U.S. ARMY CORPS OF ENGINEERS
NEW ORLEANS DISTRICT
NEW ORLEANS, LOUISIANA

URS
3500 N. Causeway Blvd.
Suite 900
Metairie, Louisiana 70002
(504) 837-6328
PROJECT No. 10001520.00001

DESIGNED BY: NC	DATE: 2/28/2008
DWN BY: S.W.F.	CKD BY: R.J.G.
SOLICITATION NO.: W912P8-00-B-XXXX	
SUBMITTED BY: ROY THOMAS	CONTRACT NO.: W912P8-07-D-0047
PLOT SCALE: 1:1	PLOT DATE: 7/24/2008
FILE NUMBER: 1-NN-NNNNN	
SIZE: ANSI D	FILE NAME: s-09.dgn

WEST BANK AND VICINITY, NEW ORLEANS, LOUISIANA
HURRICANE PROTECTION PROJECT
ENGINEERING ALTERNATIVE REPORT
FOR THE ENLARGEMENT OF HURRICANE PROTECTION
ALGIERS CANAL INDUSTRIAL REACH, PHASE 2
STA. 980+00 to STA. 1230+00
TYPICAL T-WALL MONOLITHS
ALTERNATIVE 6

SHEET IDENTIFICATION
S-09

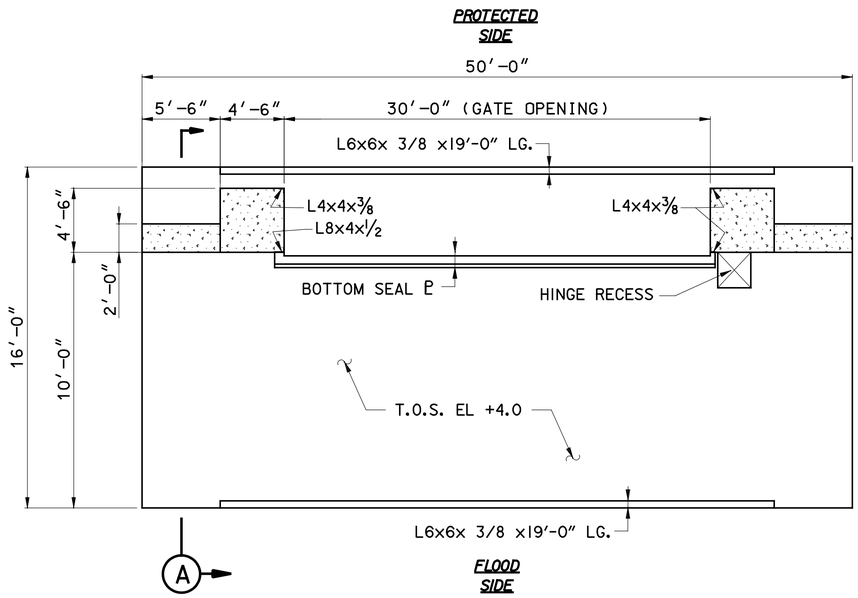

30-FT SWING GATE MONOLITH PILASTER & SEAL PLATE LAYOUT

SCALE: 3/16 " = 1'-0"

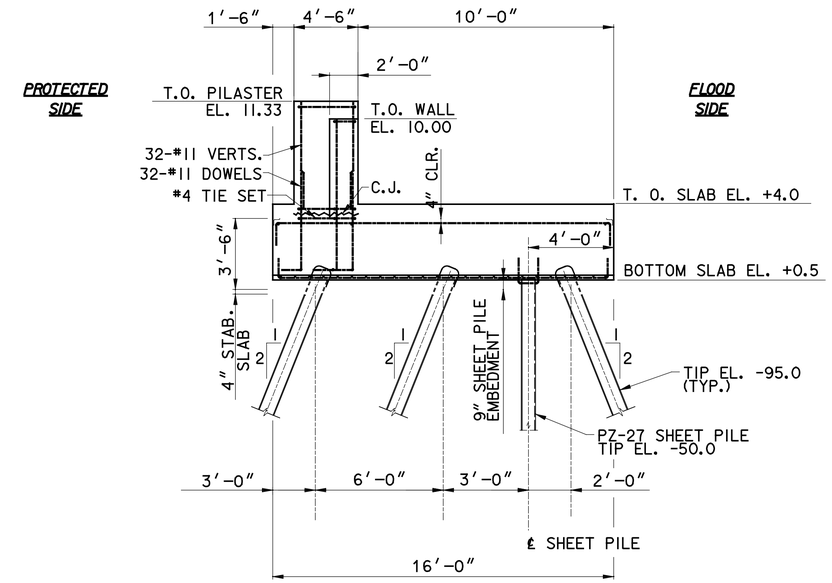

SECTION A

SCALE: 3/16" = 1'- 0"

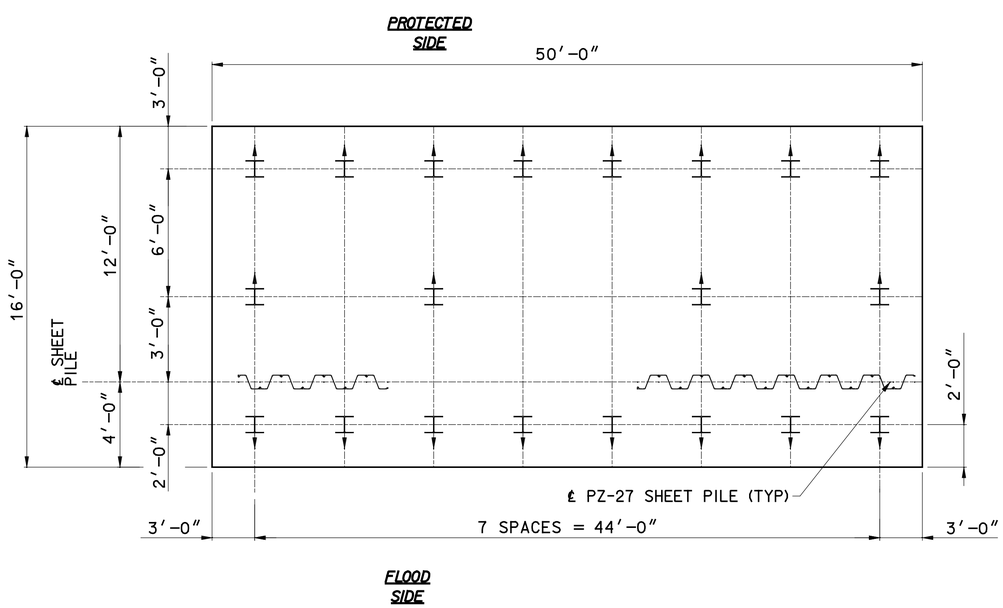

30-FT SWING GATE MONOLITH PILE LAYOUT

SCALE: 3/16 " = 1'-0"

NOTES:

1. STRUCTURAL CONCRETE: f'c = 4000 psi
2. Fy = 60 ksi
3. SEE DWG. S-16 FOR PILE DETAILS.
4. MONOLITH LENGTH SHOWN IN PLAN REPRESENTS THE DISTANCE MEASURED FROM CENTER LINE OF JOINT TO CENTER LINE OF JOINT.

LEGEND

HP14x89 PILE BATTERED IN DIRECTION OF ARROW, SEE MONOLITH DETAILS FOR BATTER

= WALL STEM

= PZ-27 SHEET PILE

SCALE: 1/16" = 1'- 0"

0 10' 20' 30' 40' 50'

US Army Corps of Engineers®
NEW ORLEANS DISTRICT

MARK	DESCRIPTION	DATE	APPR.

MARK	DESCRIPTION	DATE	APPR.

U.S. ARMY CORPS OF ENGINEERS
NEW ORLEANS DISTRICT
NEW ORLEANS, LOUISIANA

URS
3500 N. Causeway Blvd.
Suite 900
Metairie, Louisiana 70002
(504) 837-6328
PROJECT No. 10001520.00001

DESIGNED BY: N.C.
DWN BY: S.W.F.
CKD BY: R.J.G.
SUBMITTED BY: ROY THOMAS
PLOT SCALE: As Set
PLOT DATE: 7/24/2008
SIZE: ANSI D
FILE NAME: s-10.dgn
DATE: 2/28/2008
SOLICITATION NO.: W912P8-09-B-XXXX
CONTRACT NO.: W912P8-07-D-0047
FILE NUMBER: H-NN-NNNNN

WEST BANK AND VICINITY, NEW ORLEANS, LOUISIANA
HURRICANE PROTECTION PROJECT
ENGINEERING ALTERNATIVE REPORT
FOR THE ENLARGEMENT OF HURRICANE PROTECTION
ALGIERS CANAL INDUSTRIAL REACH, PHASE 2
STA. 980+00 to STA. 1230+00
30' SWING GATE
ALTERNATIVE 7

SHEET IDENTIFICATION
S-10

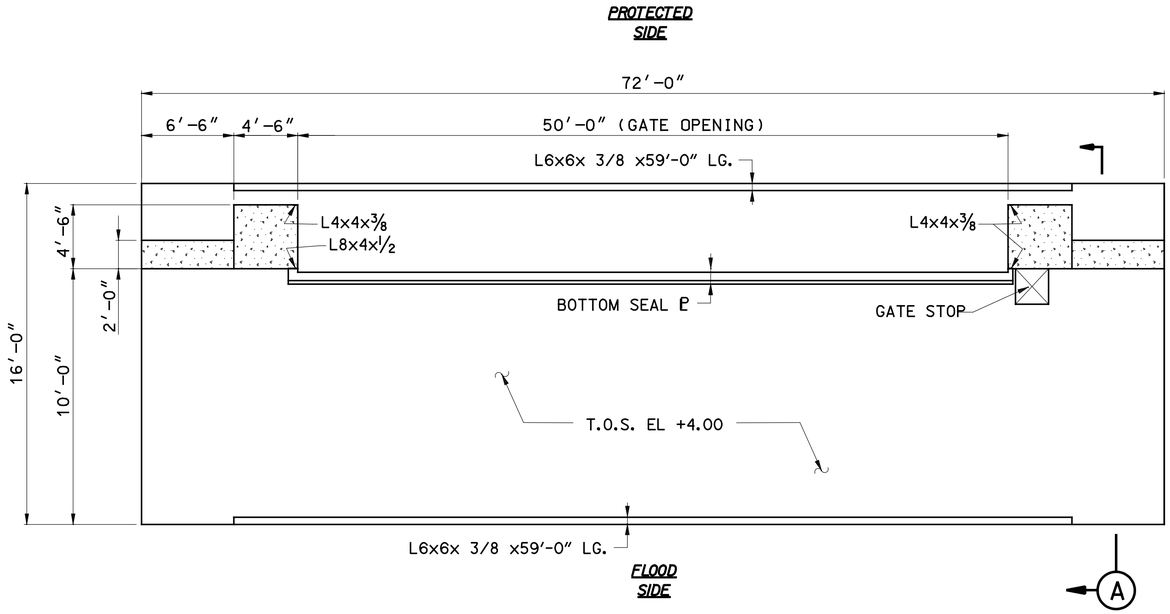

50-FT ROLLER GATE MONOLITH PILASTER & SEAL PLATE LAYOUT

SCALE: 3/16 " = 1'-0"

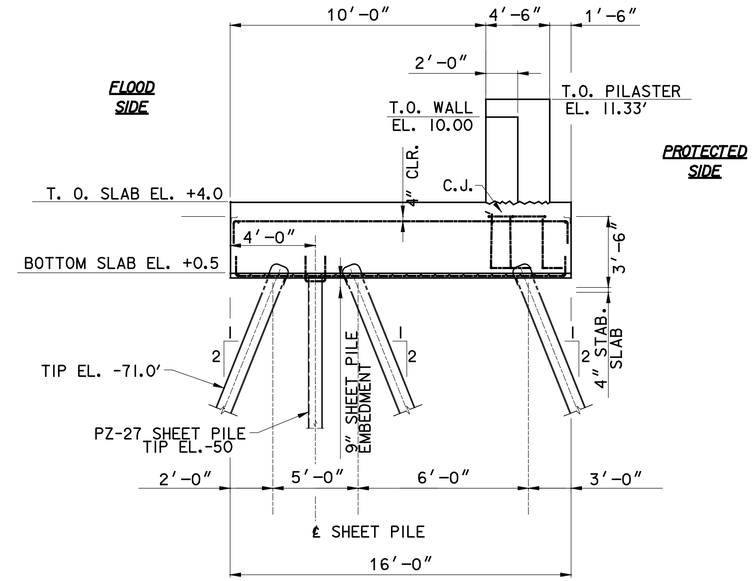

SECTION (A)

SCALE: 3/16" = 1'- 0"

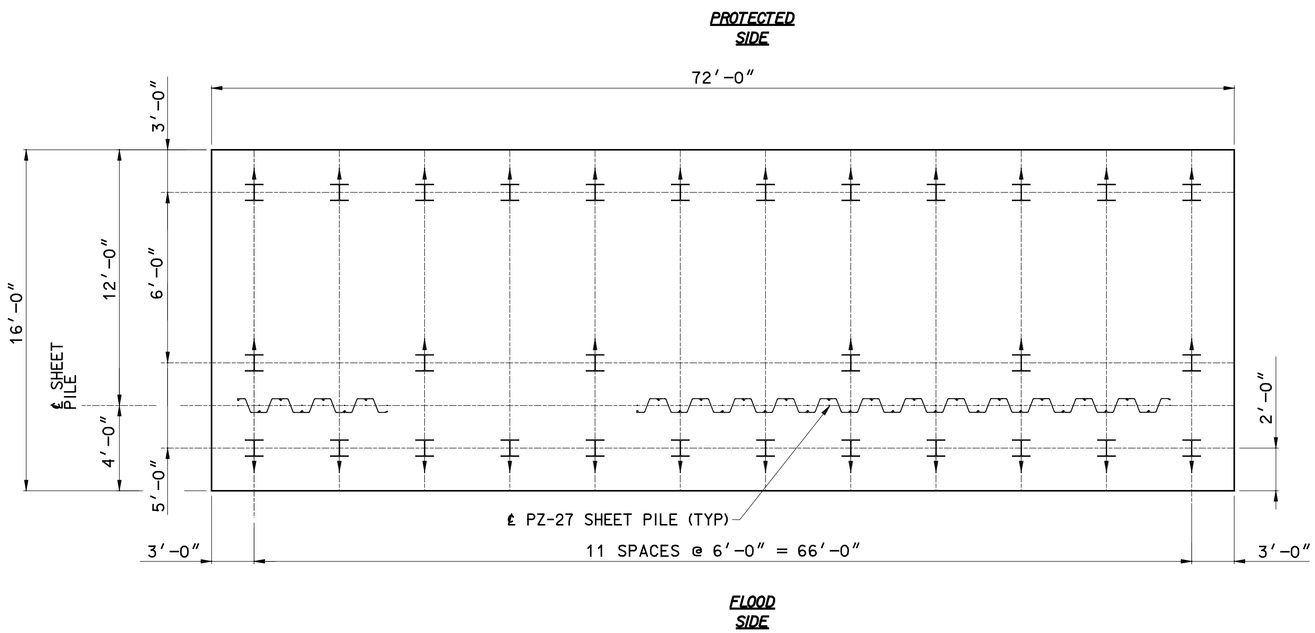

50-FT ROLLER GATE MONOLITH PILE LAYOUT

SCALE: 3/16 " = 1'-0"

NOTES:

1. STRUCTURAL CONCRETE: f'c = 4000 psi
2. Fy = 60 ksi
3. SEE DWG. S-16 FOR PILE DETAILS.
4. MONOLITH LENGTH SHOWN IN PLAN REPRESENTS THE DISTANCE MEASURED FROM CENTER LINE OF JOINT TO CENTER LINE OF JOINT.

LEGEND

HP14x89 PILE BATTERED IN DIRECTION OF ARROW, SEE MONOLITH DETAILS FOR BATTER

= WALL STEM

= PZ-27 SHEET PILE

SCALE: 1/16" = 1'- 0"

0 10' 20' 30' 40' 50'

US Army Corps of Engineers®
NEW ORLEANS DISTRICT

MARK	DESCRIPTION	DATE	APPR.	MARK	DESCRIPTION	DATE	APPR.

U.S. ARMY CORPS OF ENGINEERS
NEW ORLEANS DISTRICT
NEW ORLEANS, LOUISIANA

URS
3300 N. Causeway Blvd.
Suite 900
Metairie, Louisiana 70002
(504) 837-5328
PROJECT No. 10001520.00001

DESIGNED BY: L.B.R.
DWN BY: S.W.F.
CKD BY: R.J.G.
SUBMITTED BY: ROY THOMAS
PLOT SCALE: As Noted
PLOT DATE: 7/24/2008
SIZE: ANSI D
FILE NAME: s-11.dgn
DATE: 2/28/2008
SOLICITATION NO.: W912P8-00-B-XXXX
CONTRACT NO.: W912P8-07-D-0047
FILE NUMBER: H-NN-NNNNN

WEST BANK AND VICINITY, NEW ORLEANS, LOUISIANA
HURRICANE PROTECTION PROJECT
ENGINEERING ALTERNATIVE REPORT
FOR THE ENLARGEMENT OF HURRICANE PROTECTION
ALGIERS CANAL INDUSTRIAL REACH, PHASE 2
STA. 980+00 to STA. 1230+00
50' ROLLER GATE
ALTERNATIVE 7

SHEET IDENTIFICATION
S-11

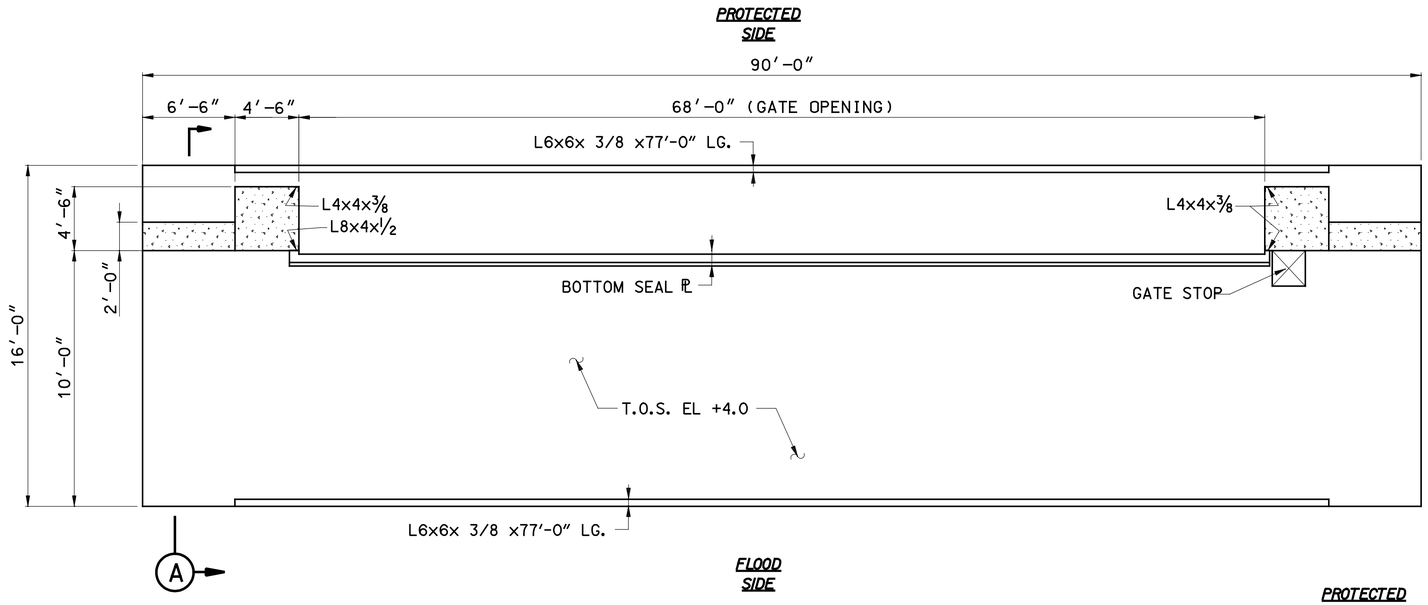

68-FT ROLLER GATE MONOLITH PILASTER & SEAL PLATE LAYOUT

SCALE: 3/16 " = 1'-0"

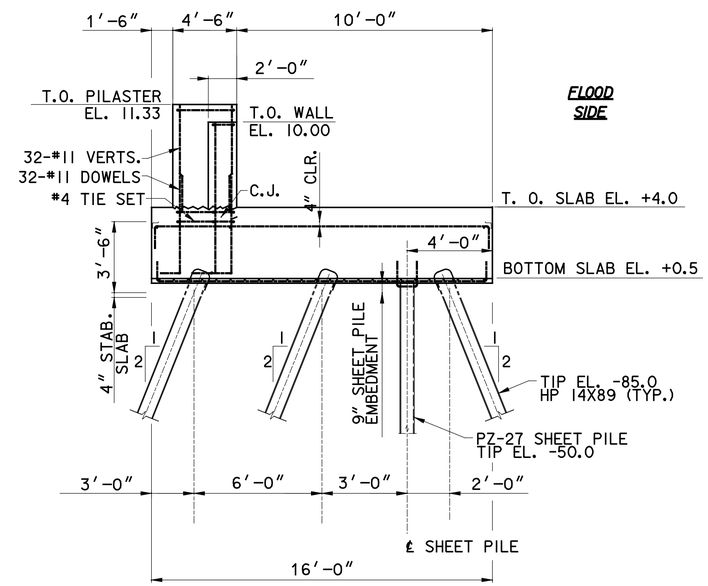

SECTION A

SCALE: 3/16" = 1'- 0"

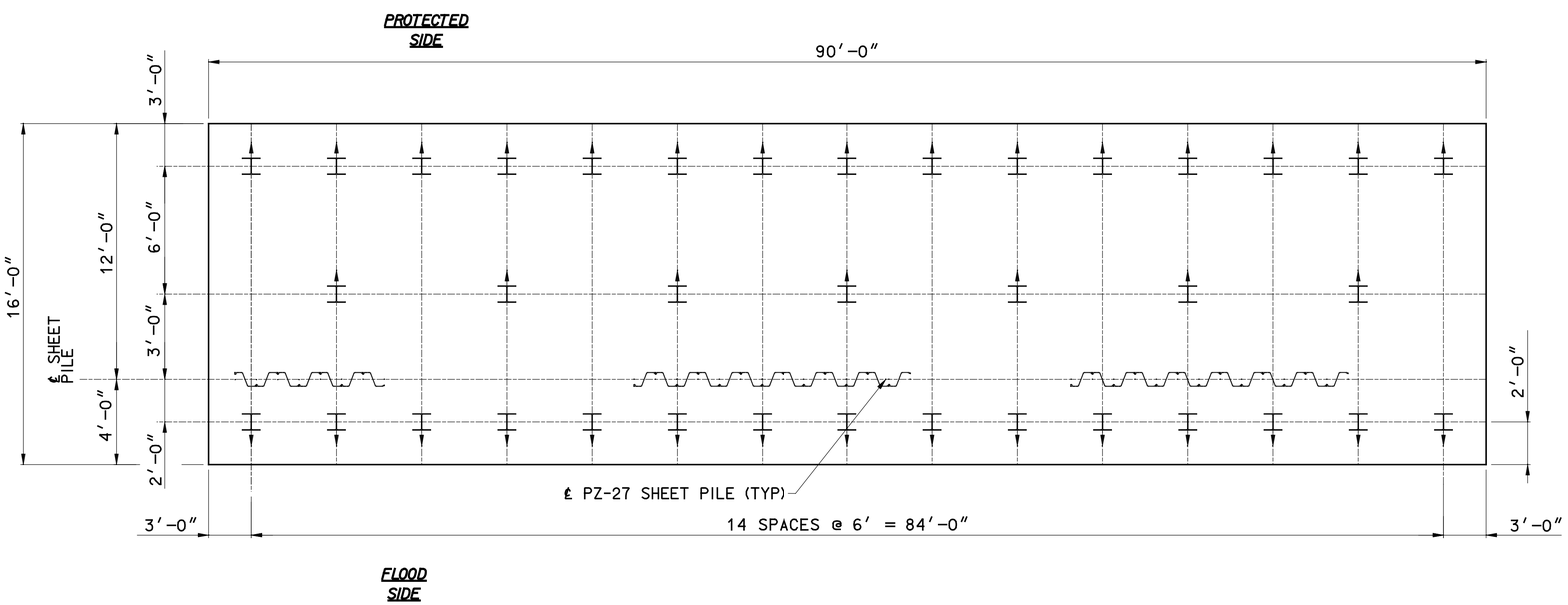

68-FT ROLLER GATE MONOLITH PILE LAYOUT

SCALE: 3/16 " = 1'-0"

NOTES:

1. STRUCTURAL CONCRETE: f'c = 4000 psi
2. Fy = 60 ksi
3. SEE DWG. S-16 FOR PILE DETAILS.
4. MONOLITH LENGTH SHOWN IN PLAN REPRESENTS THE DISTANCE MEASURED FROM CENTER LINE OF JOINT TO CENTER LINE OF JOINT.

LEGEND

HP14x89 PILE BATTERED IN DIRECTION OF ARROW, SEE MONOLITH DETAILS FOR BATTER

= WALL STEM

= PZ-27 SHEET PILE

SCALE: 1/16" = 1'- 0"

0 10' 20' 30' 40' 50'

US Army Corps of Engineers®
NEW ORLEANS DISTRICT

MARK	DESCRIPTION	DATE	APPR.	MARK	DESCRIPTION	DATE	APPR.

U.S. ARMY CORPS OF ENGINEERS
NEW ORLEANS DISTRICT
NEW ORLEANS, LOUISIANA

URS 3500 N. Causeway Blvd. Suite 900 Metairie, Louisiana 70002 (504) 837-8328
PROJECT No. 10001520.00001

DESIGNED BY: L.B.R.
DWN BY: S.W.F.
CKD BY: R.J.G.
SUBMITTED BY: ROY THOMAS
PLOT SCALE: 1:1
PLOT DATE: 7/24/2008
SIZE: ANSI D
FILE NAME: s-12.dgn
DATE: 2/28/2008
SOLICITATION NO.: W912P8-00-B-XXXX
CONTRACT NO.: W912P8-07-D-0047
FILE NUMBER: I-NNN-NNNNN

WEST BANK AND VICINITY, NEW ORLEANS, LOUISIANA
HURRICANE PROTECTION PROJECT
ENGINEERING ALTERNATIVE REPORT
FOR THE ENLARGEMENT OF HURRICANE PROTECTION
ALGIERS CANAL INDUSTRIAL REACH, PHASE 2
STA. 980+00 to STA. 1230+00
68' ROLLER GATE
ALTERNATIVE 7

SHEET IDENTIFICATION
S-12

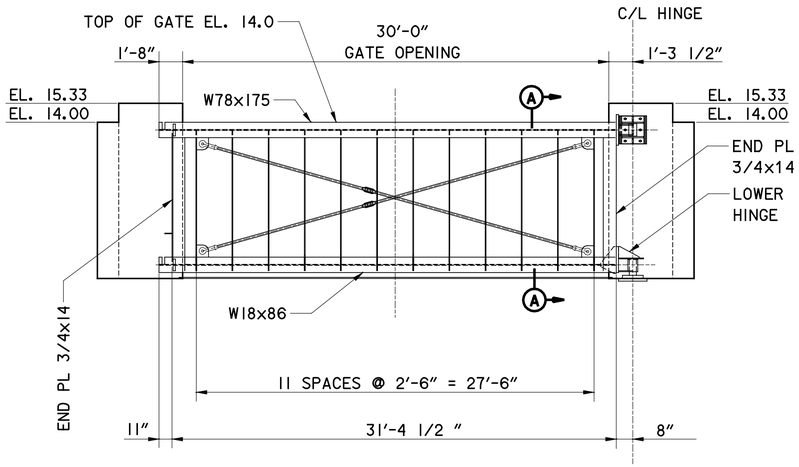

SWING GATE
FLOOD SIDE ELEVATION
SCALE: 3/8 " = 1'-0"

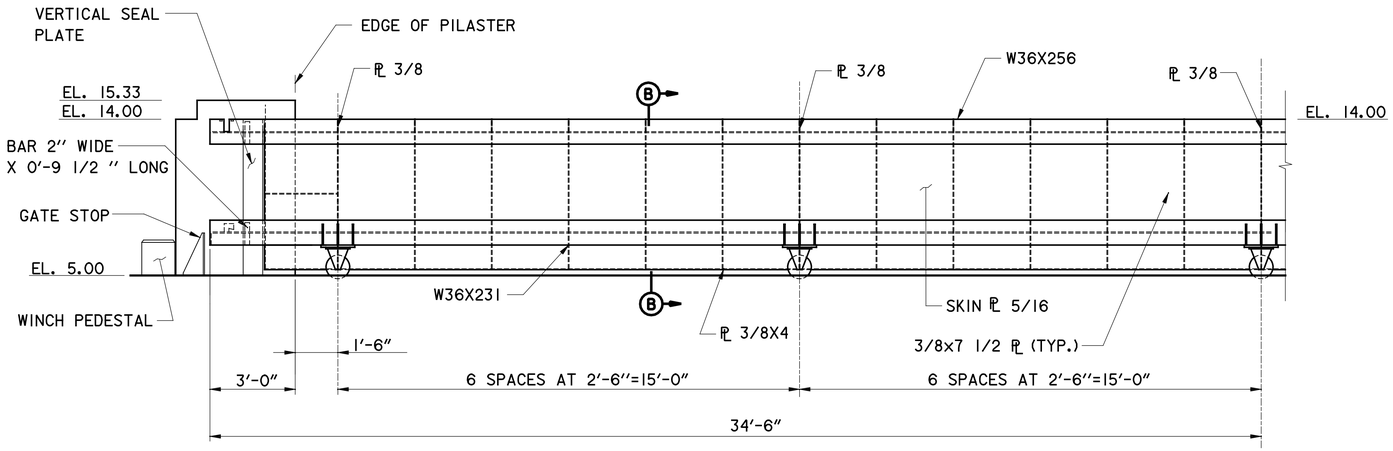

NOTE: 50' ROLLER GATE SIMILAR.

68' ROLLER GATE
FLOOD SIDE ELEVATION
SCALE: 3/8 " = 1'-0"

SCALE: 3/8" = 1'- 0"

12" 0 2' 4' 6' 8' 10'

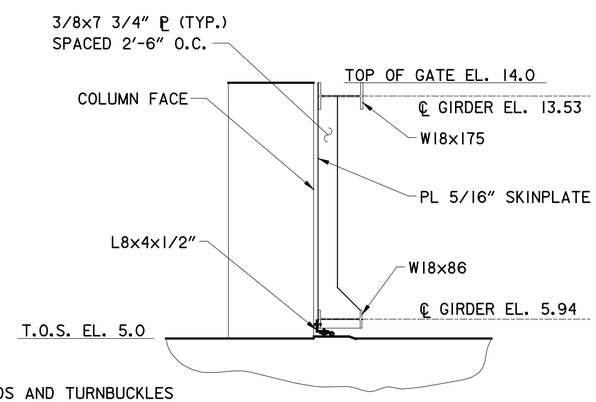

NOTE: TIE RODS AND TURNBUCKLES
NOT SHOWN FOR CLARITY

SECTION (A)
30' SWING GATE
CENTERLINE OF ALGIERS LEVEE
SCALE: 3/8 " = 1'-0"

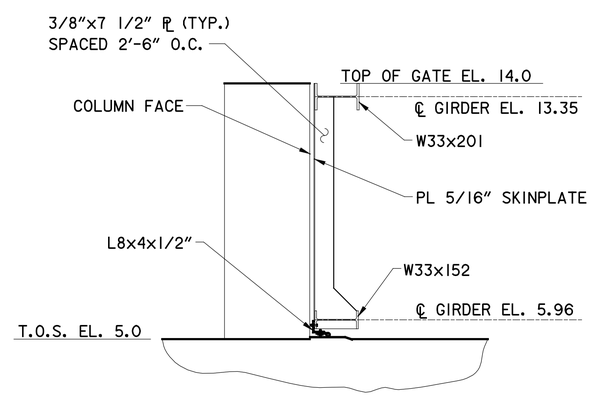

SECTION (B)
50' ROLLER GATE
CENTERLINE OF ALGIERS LEVEE
SCALE: 3/8 " = 1'-0"

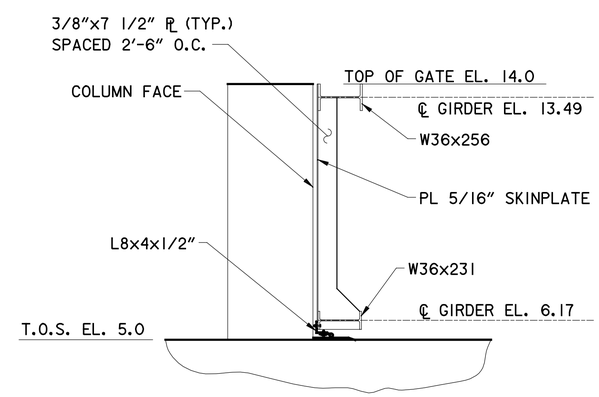

SECTION (B)
68' ROLLER GATE
CENTERLINE OF ALGIERS LEVEE
SCALE: 3/8 " = 1'-0"

US Army Corps of Engineers®
NEW ORLEANS DISTRICT

MARK	DESCRIPTION	DATE	APPR.	MARK	DESCRIPTION	DATE	APPR.

U.S. ARMY CORPS OF ENGINEERS
NEW ORLEANS DISTRICT
NEW ORLEANS, LOUISIANA

URS
3500 N. Causeway Blvd.
Suite 900
Metairie, Louisiana 70002
(504) 837-6325
PROJECT No. 10001500.00001

DESIGNED BY: R.J.G.
DWN BY: SDC III
CKD BY: N.C.
SUBMITTED BY: ROY THOMAS
PLOT SCALE: 64
PLOT DATE: 7/24/2009
FILE NAME: s-13.dgn
SIZE: ANSI D
DATE: 2/28/2008
SOLICITATION NO.: W912PB-09-B-XXXX
CONTRACT NO.: W912PB-07-D-0047
FILE NUMBER: H-NN-NNNNN

WEST BANK AND VICINITY, NEW ORLEANS, LOUISIANA
HURRICANE PROTECTION PROJECT
ENGINEERING ALTERNATIVE REPORT
FOR THE ENLARGEMENT OF HURRICANE PROTECTION
ALGIERS CANAL INDUSTRIAL REACH, PHASE 2
STA. 980+00 to STA. 1230+00
ROLLER GATE DETAILS
ALTERNATIVES 1,2,3 & 6

SHEET IDENTIFICATION
S-13

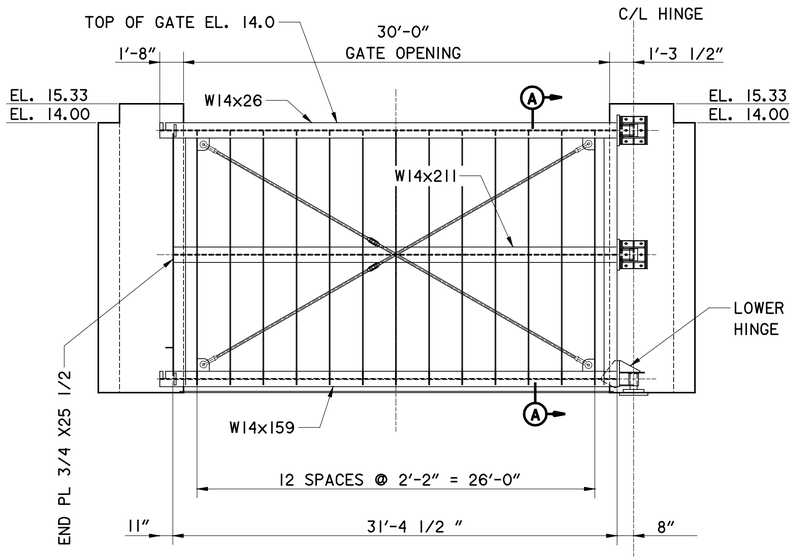

SWING GATE
FLOOD SIDE ELEVATION
SCALE: 3/8 " = 1'-0"

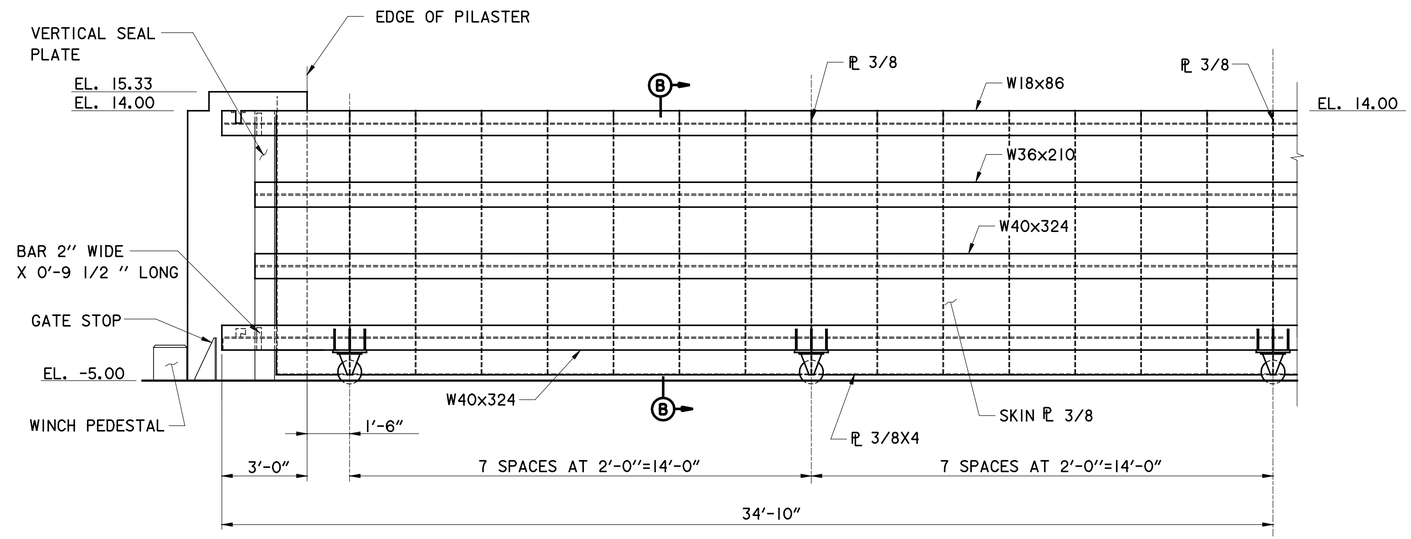

SCALE: 3/8" = 1'- 0"

12" 0 2' 4' 6' 8' 10'

68' ROLLER GATE
FLOOD SIDE ELEVATION
SCALE: 3/8 " = 1'-0"

NOTE: 50' ROLLER GATE SIMILAR.

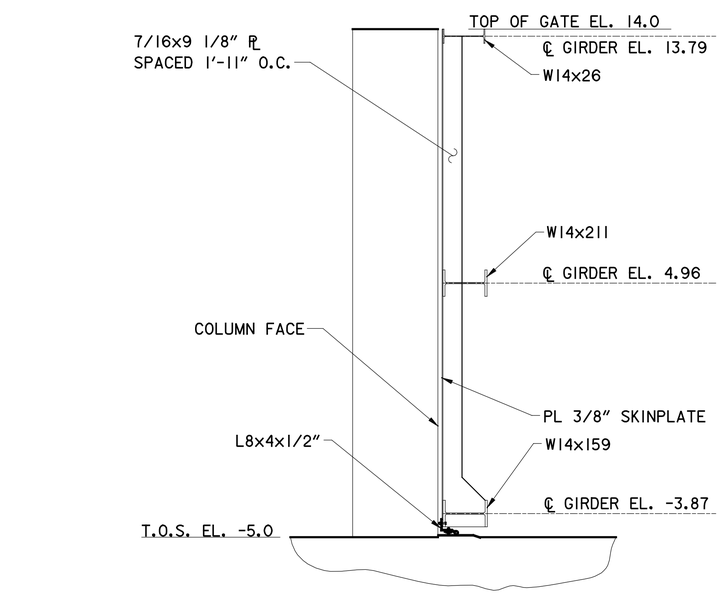

NOTE: TIE RODS AND TURNBUCKLES NOT SHOWN FOR CLARITY

SECTION (A)
30' SWING GATE
PROTECTED SIDE OF ALGIERS LEVEE
SCALE: 3/8 " = 1'-0"

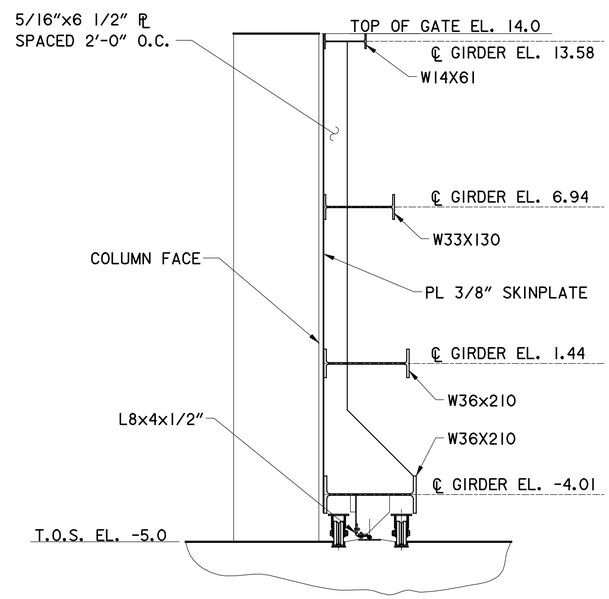

SECTION (B)
50' BOTTOM ROLLER GATE
PROTECTED SIDE OF ALGIERS LEVEE
SCALE: 3/8 " = 1'-0"

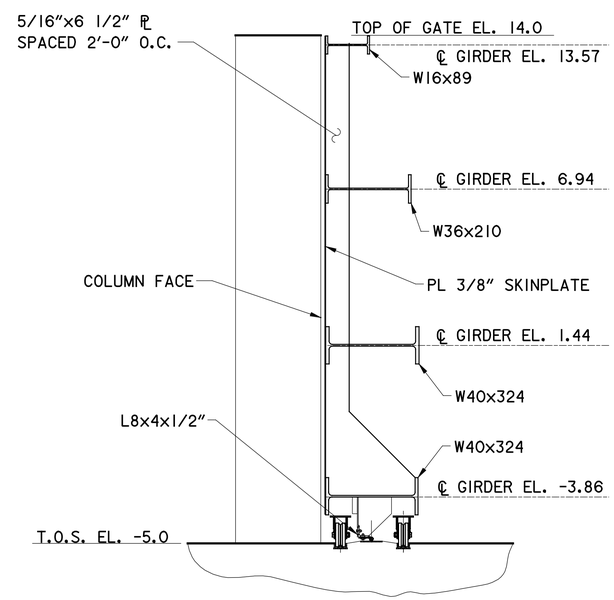

SECTION (B)
68' BOTTOM ROLLER GATE
PROTECTED SIDE OF ALGIERS LEVEE
SCALE: 3/8 " = 1'-0"

US Army Corps of Engineers®
NEW ORLEANS DISTRICT

MARK	DESCRIPTION	DATE	APPR.	MARK	DESCRIPTION	DATE	APPR.

U.S. ARMY CORPS OF ENGINEERS
NEW ORLEANS DISTRICT
NEW ORLEANS, LOUISIANA

URS
3500 N. Causeway Blvd.
Suite 900
Metairie, Louisiana 70002
(504) 837-8328
PROJECT No. 10001520.00001

DESIGNED BY: R.J.G.
DWN BY: SDC III
CKD BY: N.C.
SUBMITTED BY: ROY THOMAS
PLOT SCALE: As Noted
PLOT DATE: 7/24/2008
SIZE: ANSI D
FILE NAME: s-14.dgn
DATE: 2/28/2008
SOLICITATION NO.: W912P8-00-B-XXXX
CONTRACT NO.: W912P8-07-D-0047
FILE NUMBER: H-NN-NNNNN

WEST BANK AND VICINITY, NEW ORLEANS, LOUISIANA
HURRICANE PROTECTION PROJECT
ENGINEERING ALTERNATIVE REPORT
FOR THE ENLARGEMENT OF HURRICANE PROTECTION
ALGIERS CANAL INDUSTRIAL REACH, PHASE 2
STA. 980+00 to STA. 1230+00
ROLLER GATE DETAILS
ALTERNATIVES 4 & 5

SHEET IDENTIFICATION
S-14

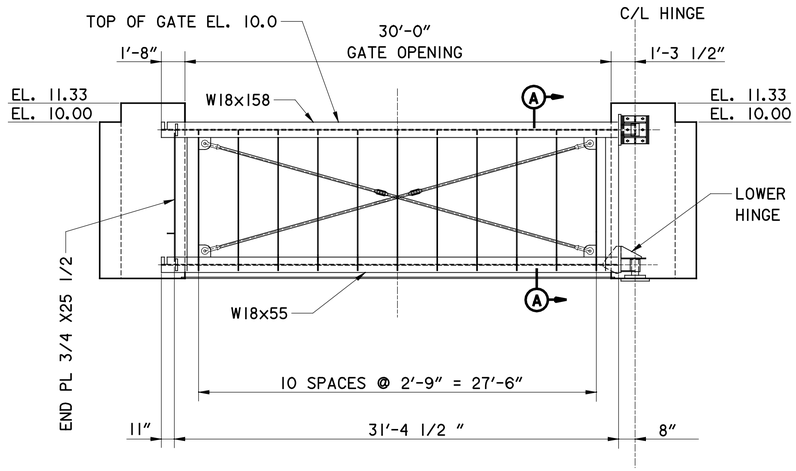

SWING GATE
FLOOD SIDE ELEVATION
SCALE: 3/8 " = 1'-0"

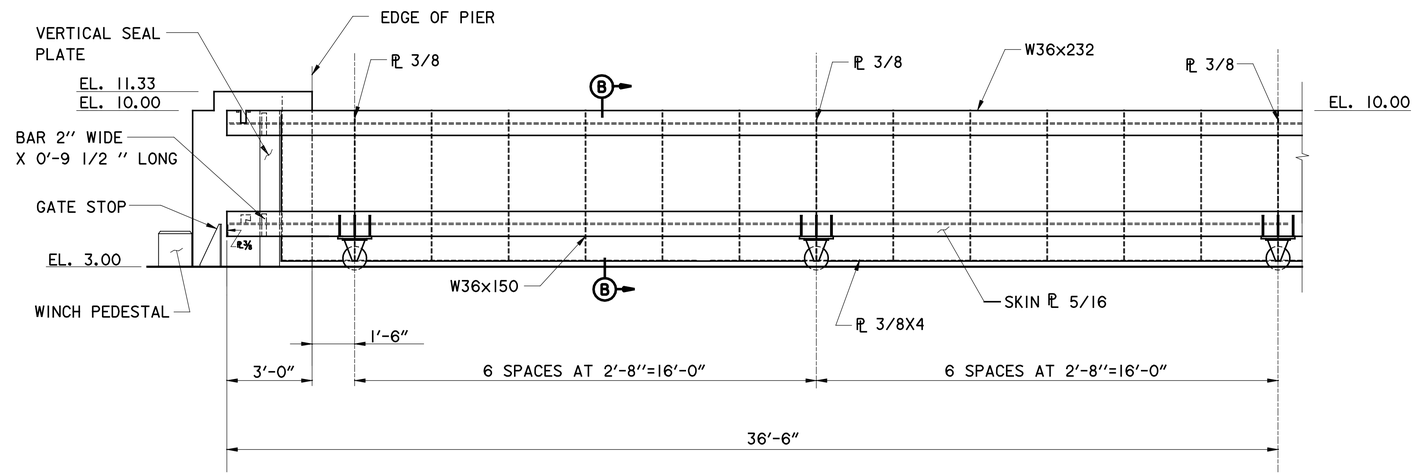

68' ROLLER GATE
FLOOD SIDE ELEVATION
SCALE: 3/8 " = 1'-0"

NOTE: 50' ROLLER GATE SIMILAR.

SCALE: 3/8" = 1'- 0"

12" 0 2' 4' 6' 8' 10'

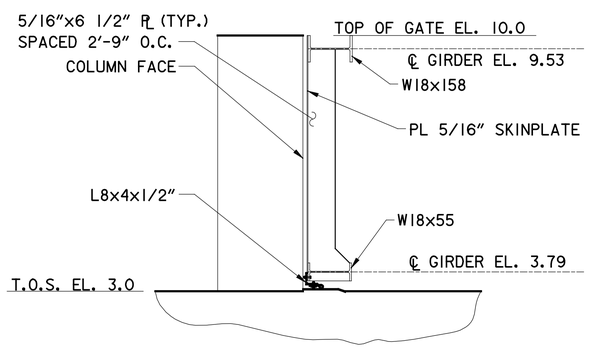

NOTE: TIE RODS AND TURNBUCKLES NOT SHOWN FOR CLARITY

SECTION (A)
30' SWING GATE
CENTERLINE OF ALGIERS LEVEE
SCALE: 3/8 " = 1'-0"

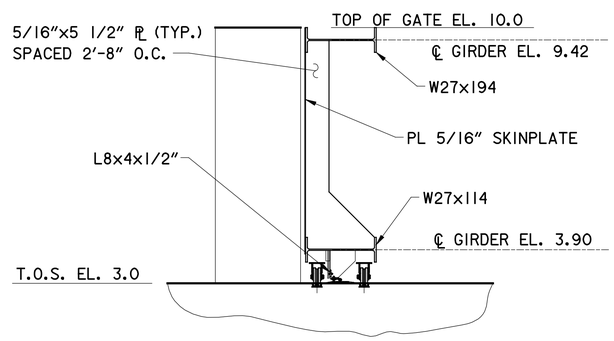

SECTION (B)
50' ROLLER GATE
CENTERLINE OF ALGIERS LEVEE
SCALE: 3/8 " = 1'-0"

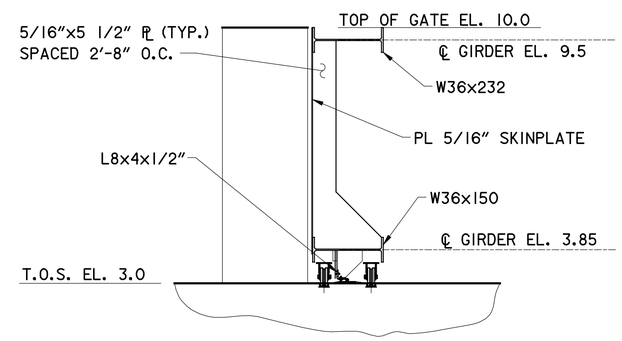

SECTION (B)
68' ROLLER GATE
CENTERLINE OF ALGIERS LEVEE
SCALE: 3/8 " = 1'-0"

US Army Corps of Engineers®
NEW ORLEANS DISTRICT

MARK	DESCRIPTION	DATE	APPR.

MARK	DESCRIPTION	DATE	APPR.

U.S. ARMY CORPS OF ENGINEERS
NEW ORLEANS DISTRICT
NEW ORLEANS, LOUISIANA

URS
3500 N. Causeway Blvd.
Suite 900
Metairie, Louisiana 70002
(504) 837-6326
PROJECT No. 10001520.00001

DESIGNED BY: R.J.G.
DWN BY: SDC III
CKD BY: N.C.
SUBMITTED BY: ROY THOMAS
PLOT SCALE: 64
PLOT DATE: 7/24/2008
SIZE: ANSI D
FILE NAME: s-15.dgn
DATE: 2/28/2008
SOLICITATION NO.: W912P8-00-B-XXXX
CONTRACT NO.: W912P8-07-D-0047
FILE NUMBER: H-NN-NNNNN

WEST BANK AND VICINITY, NEW ORLEANS, LOUISIANA
HURRICANE PROTECTION PROJECT
ENGINEERING ALTERNATIVE REPORT
FOR THE ENLARGEMENT OF HURRICANE PROTECTION
ALGIERS CANAL INDUSTRIAL REACH, PHASE 2
STA. 980+00 to STA. 1230+00
ROLLER GATE DETAILS
ALTERNATIVE 7

SHEET IDENTIFICATION
S-15

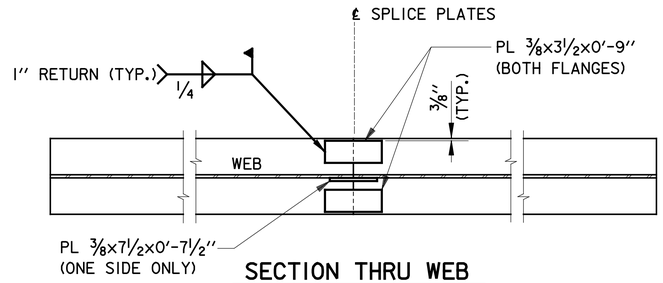

SECTION THRU WEB

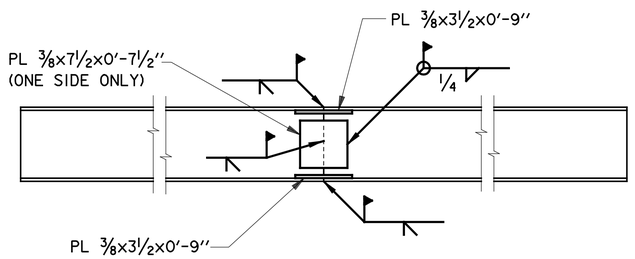

NOTE:
GROOVE WELDS SHALL BE GROUND SMOOTH FOR FLUSH FIT OF OVERLAPPING SPLICE PLATES AS REQUIRED.

WEB ELEVATION

HP PILE SPLICE

SCALE: 1" = 1' - 0"

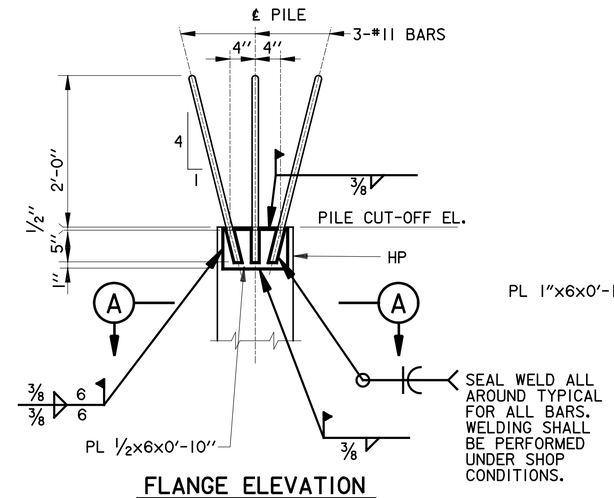

FLANGE ELEVATION

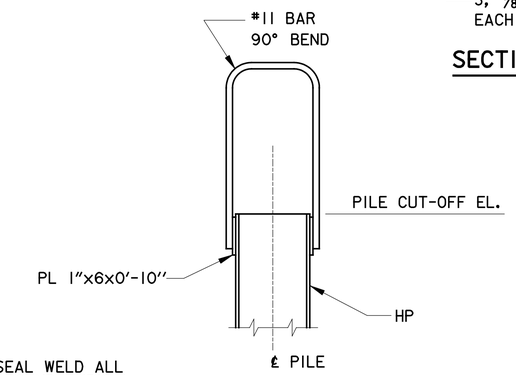

WEB ELEVATION

TENSION PILE CONNECTION DETAIL

SCALE: 1" = 1' - 0"

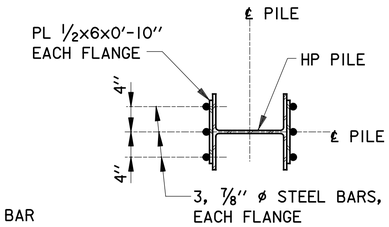

SECTION (A)

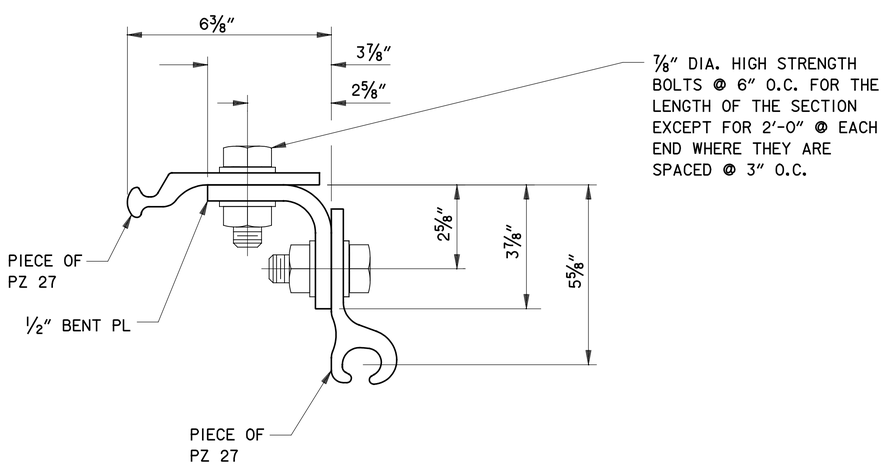

TYPICAL SHEETPILE CORNER DETAIL

SCALE: N.T.S.

SCALE: 1" = 1'- 0"

12" 0 1' 2' 3' 4' 5'

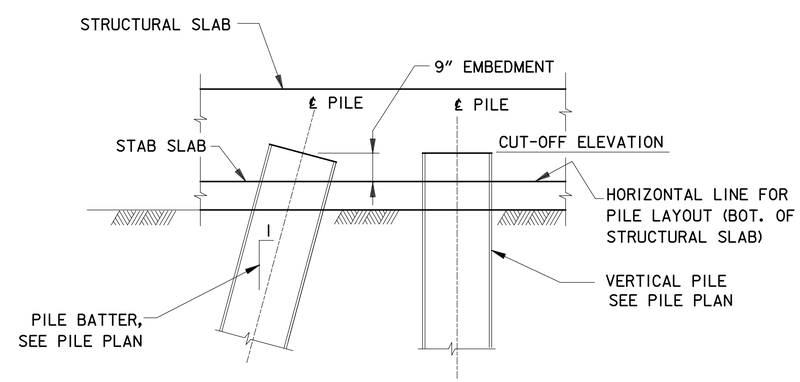

NOTES:

1. FOR PILE CUT-OFF ELEVATIONS, SEE PILE SCHEDULE DWGS. S-01 THRU S-12.
2. PILE CUT-OFF DIMENSIONS ARE MEASURED PERPENDICULAR TO EXCAVATION LINE.

PILE CUT-OFF DETAIL

SCALE: 1" = 1'-0"

US Army Corps of Engineers®
NEW ORLEANS DISTRICT

MARK	DESCRIPTION	DATE	APPR.

MARK	DESCRIPTION	DATE	APPR.

U.S. ARMY CORPS OF ENGINEERS
NEW ORLEANS DISTRICT
NEW ORLEANS, LOUISIANA

URS
3500 N. Causeway Blvd.
Suite 900
Metairie, Louisiana 70002
(504) 837-6326
PROJECT No. 10001520.00001

DESIGNED BY: NC
DWN BY: S.D.L.
CKD BY: R.J.G.
SUBMITTED BY: ROY THOMAS
PLOT SCALE: 12
PLOT DATE: 7/24/2008
SIZE: ANSI D
FILE NAME: s-16.dgn
DATE: 2/28/2008
SOLICITATION NO.: W912P8-00-B-XXXX
CONTRACT NO.: W912P8-07-D-0047
FILE NUMBER: H-NN-NNNNN

WEST BANK AND VICINITY, NEW ORLEANS, LOUISIANA
HURRICANE PROTECTION PROJECT
ENGINEERING ALTERNATIVE REPORT
FOR THE ENLARGEMENT OF HURRICANE PROTECTION
ALGIERS CANAL INDUSTRIAL REACH, PHASE 2
STA. 980+00 to STA. 1230+00
PILE DETAILS

SHEET IDENTIFICATION
S-16

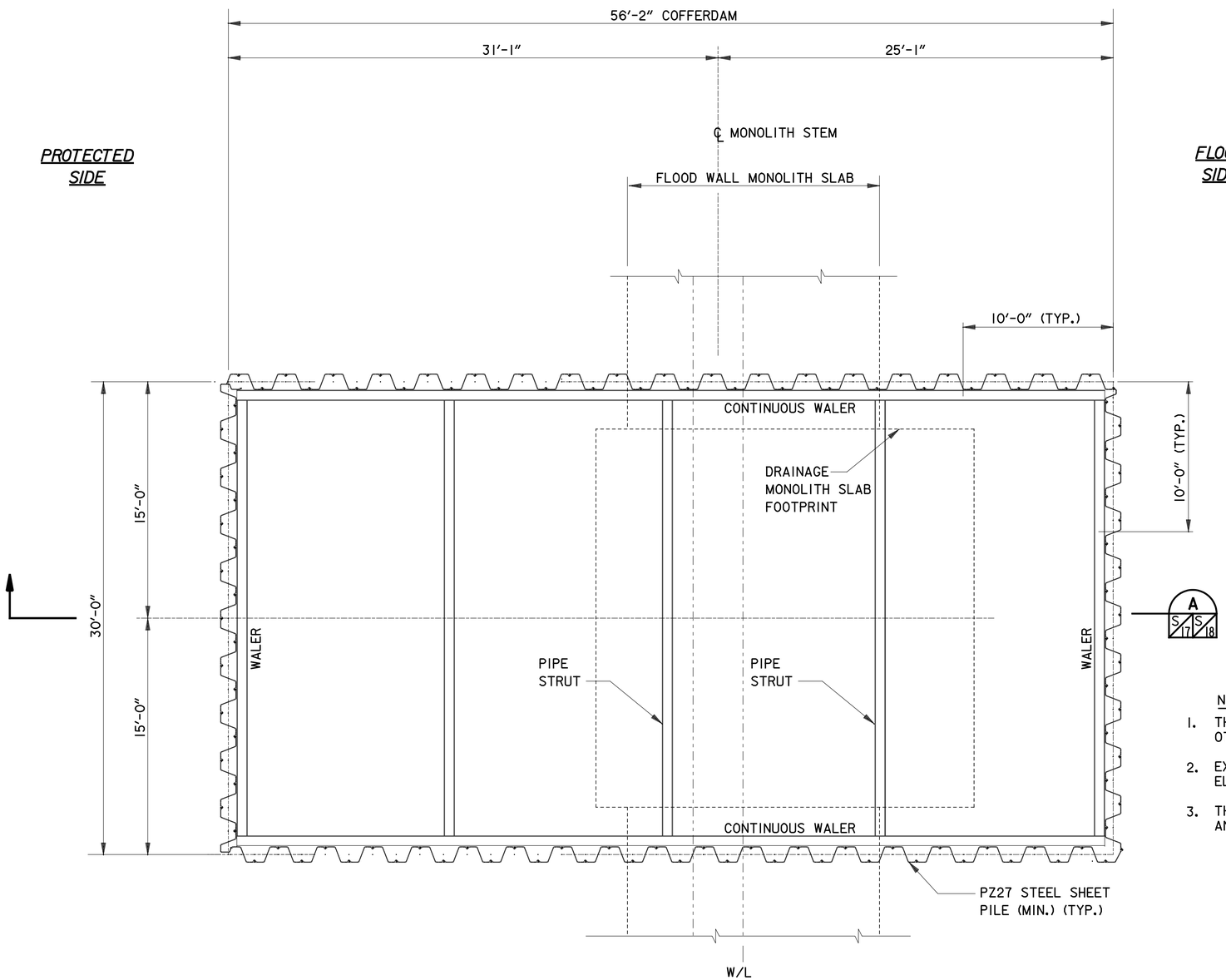

NOTES:

1. THE TRS AND DEWATERING SHOWN ON THIS DRAWING AND OTHERS ARE FOR ILLUSTRATIVE PURPOSES ONLY.
2. EXCAVATE NO DEEPER THAN 2 FEET BELOW STRUT ELEVATION BEFORE INSTALLING STRUTS.
3. THE TRS, SHORING AND OTHER ITEMS ARE TO BE DESIGNED AND DETAILED BY THE CONSTRUCTION CONTRACTOR.

CONCEPTUAL PLAN - TEMPORARY RETAINING STRUCTURE (TRS) FOR DRAINAGE MONOLITHS

N.T.S.

US Army Corps of Engineers®
NEW ORLEANS DISTRICT

MARK	DESCRIPTION	DATE	APPR.

MARK	DESCRIPTION	DATE	APPR.

U.S. ARMY CORPS OF ENGINEERS
NEW ORLEANS DISTRICT
NEW ORLEANS, LOUISIANA

URS
3500 N. Causeway Blvd.
Suite 900
Metairie, Louisiana 70002
(504) 837-6328
PROJECT No: 10001500.00001

DESIGNED BY: NC	DATE: 2/28/2008
DWN BY: S.D.C.	CKD BY: R.J.G.
SOLICITATION NO.: W912PB-09-B-XXXX	
SUBMITTED BY: ROY THOMAS	CONTRACT NO.: W912PB-07-D-0047
PLOT SCALE: 48	PLOT DATE: 7/24/2009
FILE NUMBER: H-NN-NNNNN	
SIZE: ANSI D	FILE NAME: s-17.dgn

WEST BANK AND VICINITY, NEW ORLEANS, LOUISIANA
HURRICANE PROTECTION PROJECT
ENGINEERING ALTERNATIVE REPORT
FOR THE ENLARGEMENT OF HURRICANE PROTECTION
ALGIERS CANAL INDUSTRIAL REACH, PHASE 2
STA. 980+00 to STA. 1230+00
TEMPORARY RETAINING STRUCTURE FOR
DRAINAGE MONOLITHS

SHEET IDENTIFICATION
S-17

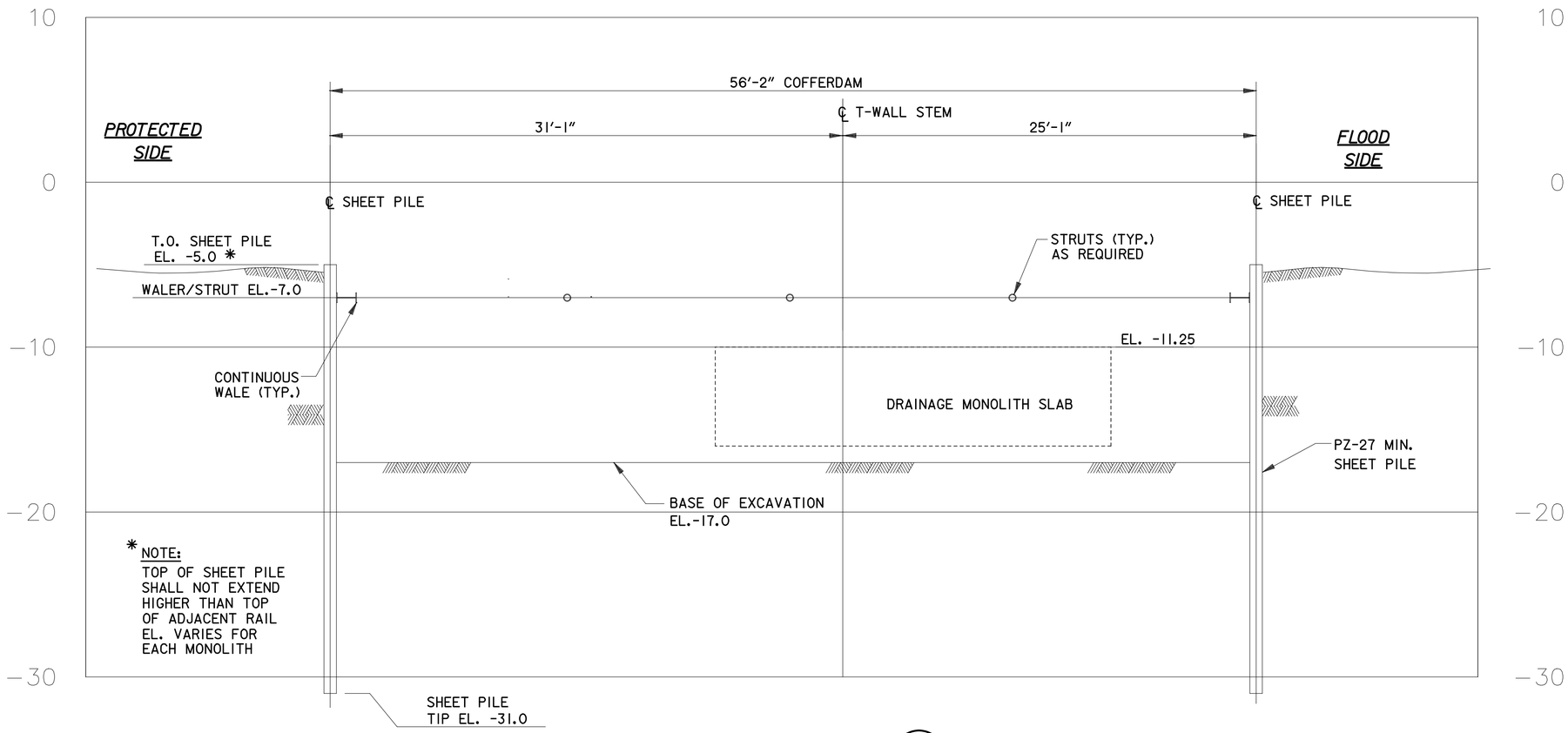

* NOTE:
TOP OF SHEET PILE SHALL NOT EXTEND HIGHER THAN TOP OF ADJACENT RAIL EL. VARIES FOR EACH MONOLITH

SECTION A S-17 S-18
N.T.S.

NOTES:

1. THE TRS AND DEWATERING SHOWN ON THIS DRAWING AND OTHERS ARE FOR ILLUSTRATIVE PURPOSES ONLY.
2. EXCAVATE NO DEEPER THAN 2 FEET BELOW STRUT ELEVATION BEFORE INSTALLING STRUTS.
3. THE TRS, SHORING AND OTHER ITEMS ARE TO BE DESIGNED AND DETAILED BY THE CONSTRUCTION CONTRACTOR.

US Army Corps of Engineers®
NEW ORLEANS DISTRICT

MARK	DESCRIPTION	DATE	APPR.

MARK	DESCRIPTION	DATE	APPR.

U.S. ARMY CORPS OF ENGINEERS
NEW ORLEANS DISTRICT
NEW ORLEANS, LOUISIANA

URS
3500 N. Causeway Blvd.
Suite 900
Metairie, Louisiana 70002
(504) 837-6328
PROJECT No. 10001500.00001

DESIGNED BY: NC	DATE: 2/28/2008
DWN BY: S.D.C.	CKD BY: R.J.G.
SUBMITTED BY: ROY THOMAS	SOLICITATION NO.: W912PB-09-B-XXXX
PLOT SCALE: 1:1	CONTRACT NO.: W912PB-07-D-0047
PLOT DATE: 2/28/2008	FILE NUMBER: H-NN-NNNNN
SIZE: ANSI D	FILE NAME: b-18.dgn

WEST BANK AND VICINITY, NEW ORLEANS, LOUISIANA
HURRICANE PROTECTION PROJECT
ENGINEERING ALTERNATIVE REPORT
FOR THE ENLARGEMENT OF HURRICANE PROTECTION
ALGIERS CANAL INDUSTRIAL REACH, PHASE 2
STA. 980+00 to STA. 1230+00
TEMPORARY RETAINING STRUCTURE FOR
DRAINAGE MONOLITHS

SHEET IDENTIFICATION
S-18

NOTE:
ALL LADDERS SHALL BE HOT-DIPPED GALVANIZED AFTER FABRICATION.

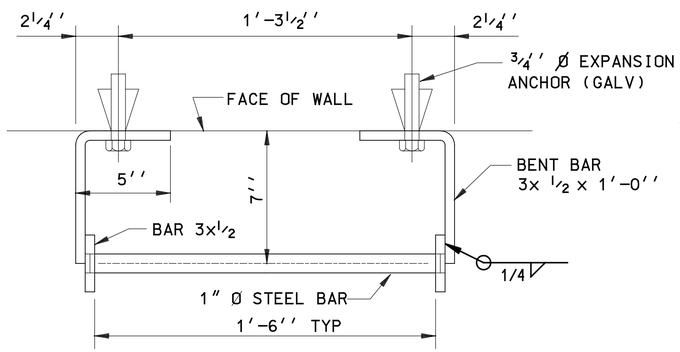

SECTION (A)

SCALE: 3" = 1'- 0"

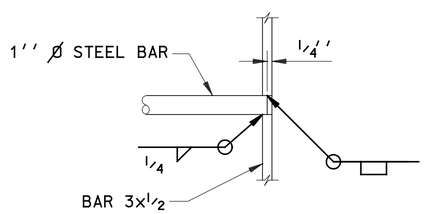

DETAIL (1)

SCALE: 3" = 1'- 0"

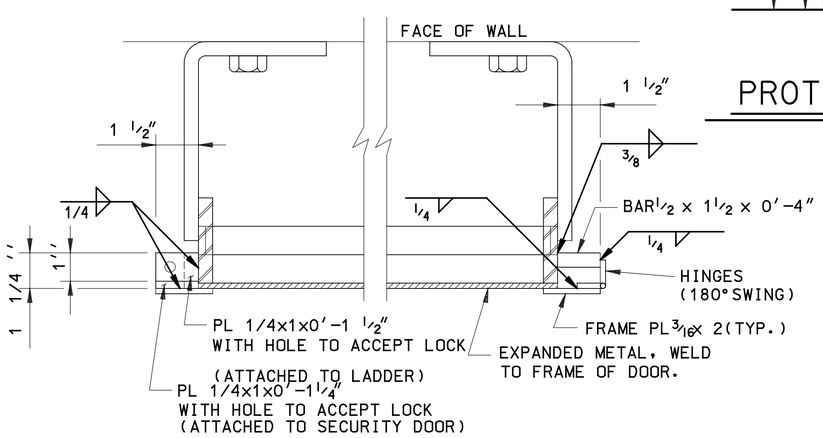

PLAN

SCALE: ⅜"=1'-0"

LADDER SECURITY DOOR DETAILS

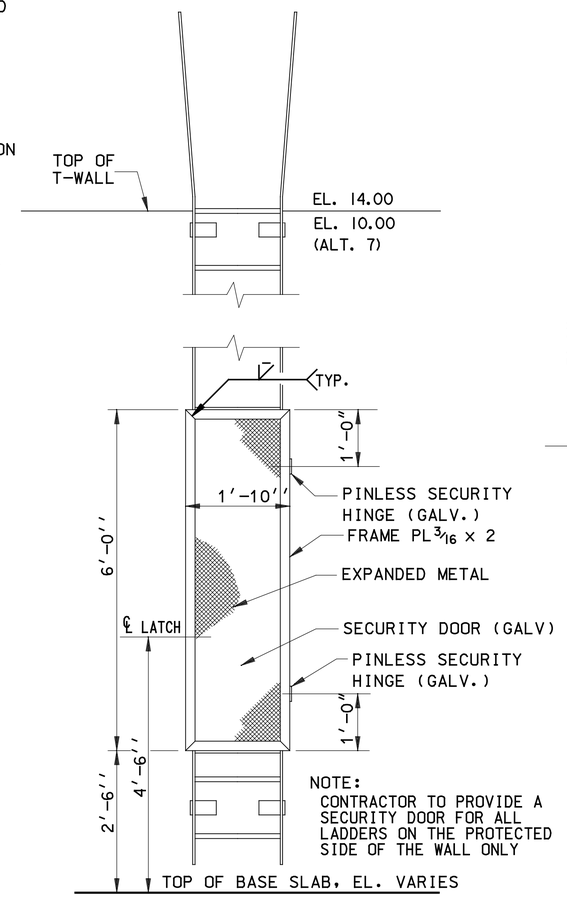

PROTECTED SIDE ELEVATION

SCALE: ¾" = 1'-0"

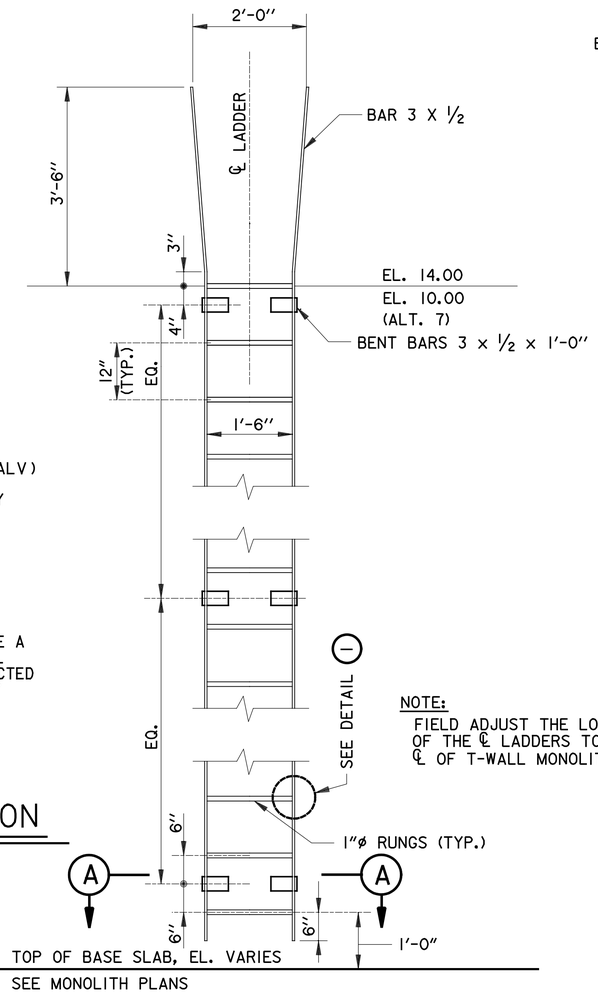

NOTE:
FIELD ADJUST THE LOCATION OF THE ℄ LADDERS TO MATCH ℄ OF T-WALL MONOLITH.

PROTECTED SIDE ELEVATION

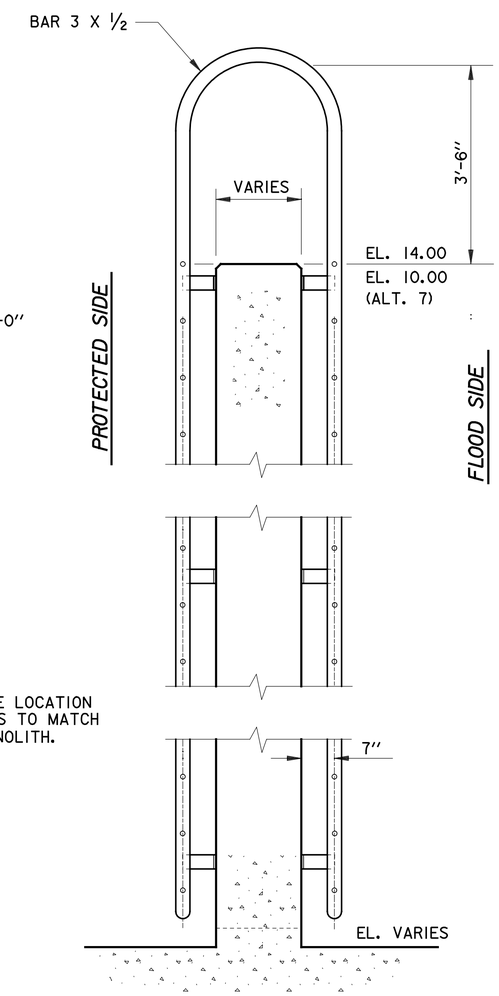

SECTION

SCALE: ⅜'' = 1'- 0''

12'' 0 2' 4' 6' 8' 10'

SCALE: ¾" = 1'-0"

12'' 0 1' 2' 3' 4' 5'

SCALE: 3'' = 1' - 0''

12'' 0 1'

FLOODWALL LADDER DETAILS

SCALE: ¾"= 1'-0"

FOR LOCATIONS SEE SCHEDULE.

US Army Corps of Engineers®
NEW ORLEANS DISTRICT

MARK	DESCRIPTION	DATE	APPR.	MARK	DESCRIPTION	DATE	APPR.

U.S. ARMY CORPS OF ENGINEERS
NEW ORLEANS DISTRICT
NEW ORLEANS, LOUISIANA

URS
3500 N. Causeway Blvd.
Suite 900
Metairie, Louisiana 70002
(504) 837-6326

DESIGNED BY: NC
DATE: 2/28/2008
DWN BY: S.D.C.
CKD BY: R.J.G.
SOLICITATION NO.: W912P8-00-B-XXXX
SUBMITTED BY: ROY THOMAS
CONTRACT NO.: W912P8-07-D-0047
PLOT SCALE: 1:1
PLOT DATE: 7/24/2008
FILE NUMBER: H-NN-NNNNN
SIZE: ANSI D
FILE NAME: s-19.dgn
PROJECT No. 10001520.00001

WEST BANK AND VICINITY, NEW ORLEANS, LOUISIANA
HURRICANE PROTECTION PROJECT
ENGINEERING ALTERNATIVE REPORT
FOR THE ENLARGEMENT OF HURRICANE PROTECTION
ALGIERS CANAL INDUSTRIAL REACH, PHASE 2
STA. 980+00 to STA. 1230+00
LADDER DETAILS

SHEET IDENTIFICATION
S-19

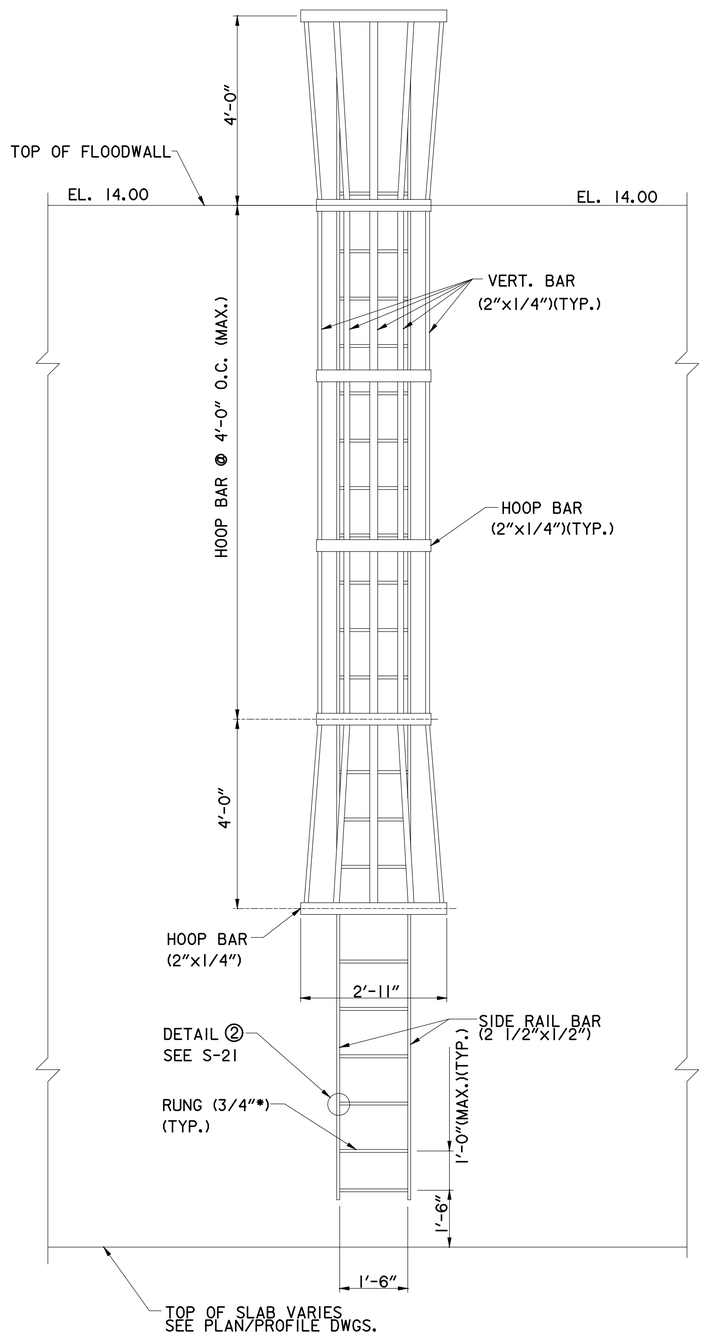

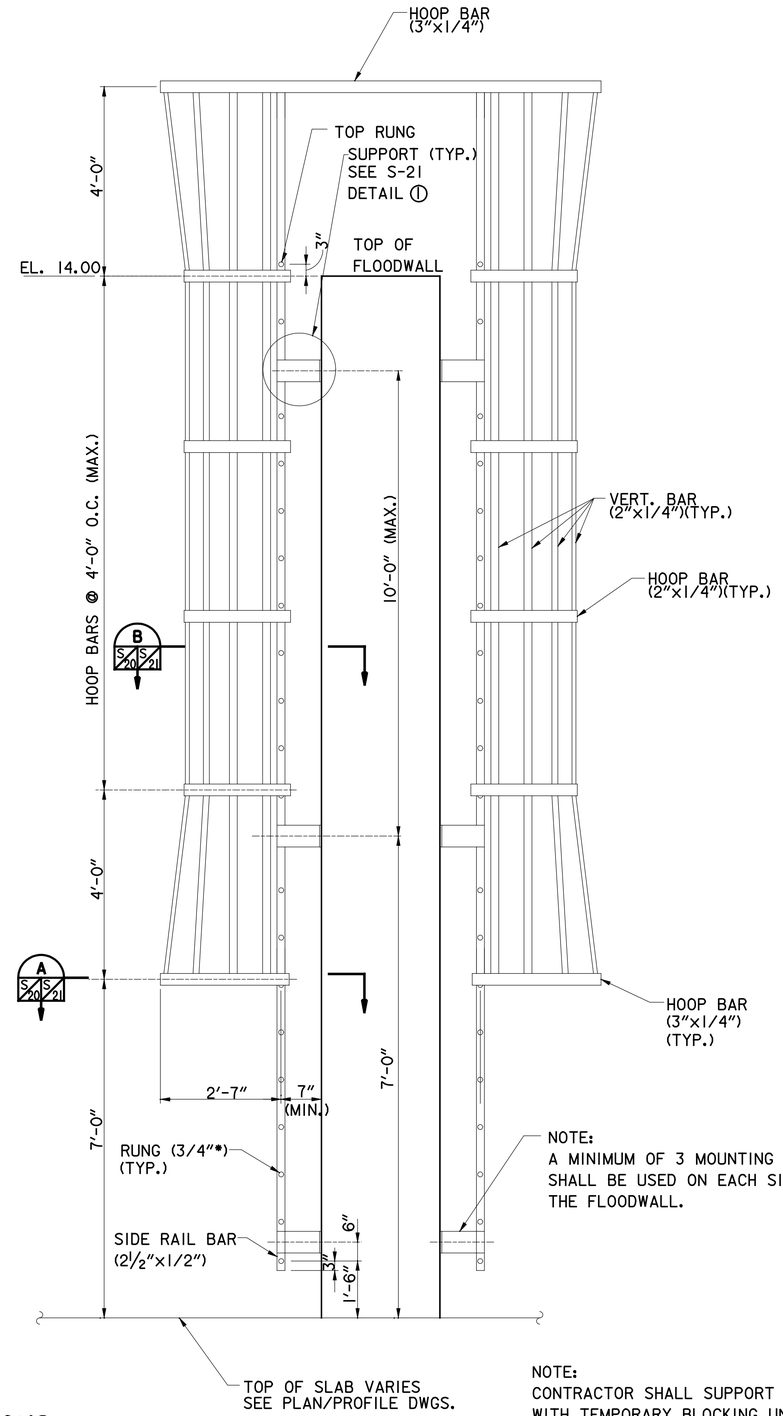

NOTE:
CONTRACTOR SHALL SUPPORT LADDER
WITH TEMPORARY BLOCKING UNTIL ALL
ANCHORS ARE INSTALLED.

TYPICAL LADDER ELEVATIONS

N.T.S

US Army Corps of Engineers®
NEW ORLEANS DISTRICT

MARK	DESCRIPTION	DATE	APPR.

MARK	DESCRIPTION	DATE	APPR.

U.S. ARMY CORPS OF ENGINEERS
NEW ORLEANS DISTRICT
NEW ORLEANS, LOUISIANA

URS
3500 N. Causeway Blvd.
Suite 900
Metairie, Louisiana 70002
(504) 837-6326
PROJECT No. 10001520.00001

DESIGNED BY: NC	DATE: 2/28/2008
DWN BY: S.D.C.	CKD BY: R.J.G.
SOLICITATION NO.: W912P8-00-B-XXXX	
SUBMITTED BY: ROY THOMAS	CONTRACT NO.: W912P8-07-D-0047
PLOT SCALE: 1:1	PLOT DATE: 7/24/2008
FILE NUMBER: H-NN-NNNNN	
SIZE: ANSI D	FILE NAME: s-20.dgn

WEST BANK AND VICINITY, NEW ORLEANS, LOUISIANA
HURRICANE PROTECTION PROJECT
ENGINEERING ALTERNATIVE REPORT
FOR THE ENLARGEMENT OF HURRICANE PROTECTION
ALGIERS CANAL INDUSTRIAL REACH, PHASE 2
STA. 980+00 to STA. 1230+00
LADDER DETAILS

SHEET IDENTIFICATION
S-20

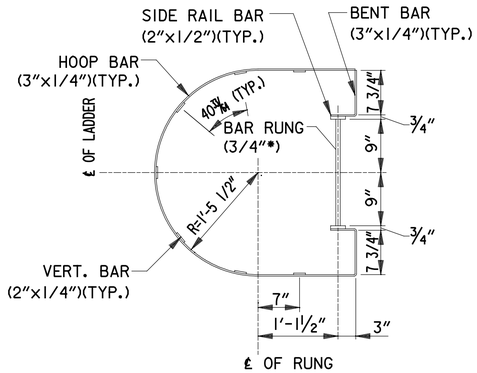

SECTION (A)

SCALE: 2" = 1'-0"

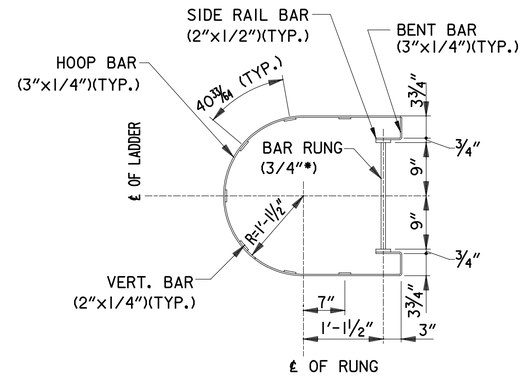

SECTION (B)

SCALE: 2" = 1'-0"

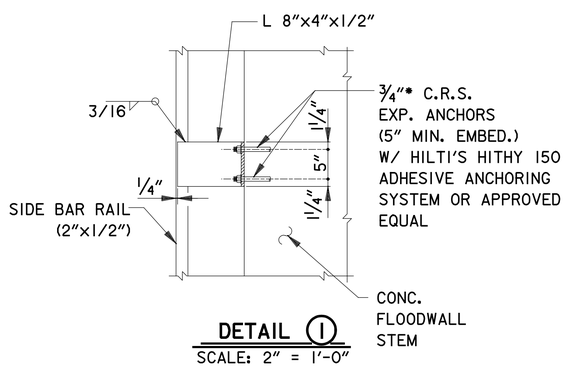

DETAIL (1)

SCALE: 2" = 1'-0"

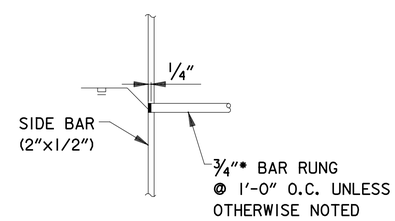

DETAIL (2)

SCALE: 4" = 1'-0"

US Army Corps of Engineers®
NEW ORLEANS DISTRICT

MARK	DESCRIPTION	DATE	APPR.

MARK	DESCRIPTION	DATE	APPR.

U.S. ARMY CORPS OF ENGINEERS
NEW ORLEANS DISTRICT
NEW ORLEANS, LOUISIANA

URS
3500 N. Causeway Blvd.
Suite 900
Metairie, Louisiana 70002
(504) 837-6326

DESIGNED BY: NC	DATE: 2/28/2008
DWN BY: S.D.L.	CKD BY: R.J.G.
SOLICITATION NO.: W912P8-00-B-XXXX	
SUBMITTED BY: ROY THOMAS	CONTRACT NO.: W912P8-07-D-0047
PLOT SCALE: 1:1	PLOT DATE: 7/24/2008
FILE NUMBER: H-NN-NNNNN	
SIZE: ANSI D	FILE NAME: s-21.dgn

PROJECT No. 10001520.00001

WEST BANK AND VICINITY, NEW ORLEANS, LOUISIANA
HURRICANE PROTECTION PROJECT
ENGINEERING ALTERNATIVE REPORT
FOR THE ENLARGEMENT OF HURRICANE PROTECTION
ALGIERS CANAL INDUSTRIAL REACH, PHASE 2
STA. 980+00 to STA. 1230+00
LADDER DETAILS

SHEET IDENTIFICATION
S-21

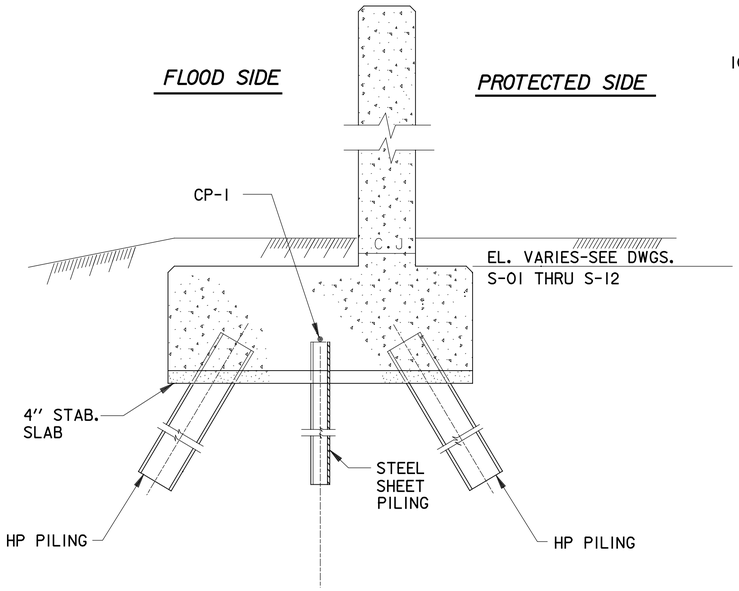

CORROSION PROTECTION DETAIL
T-WALL MONOLITHS WITH STEEL CUT-OFF SHEET PILING

SCALE: 1/2" = 1'-0"

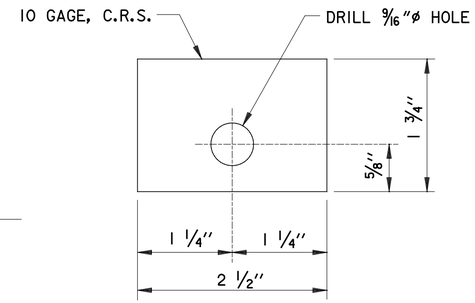

IDENTIFICATION TAG

SCALE: 1" = 1'-0"

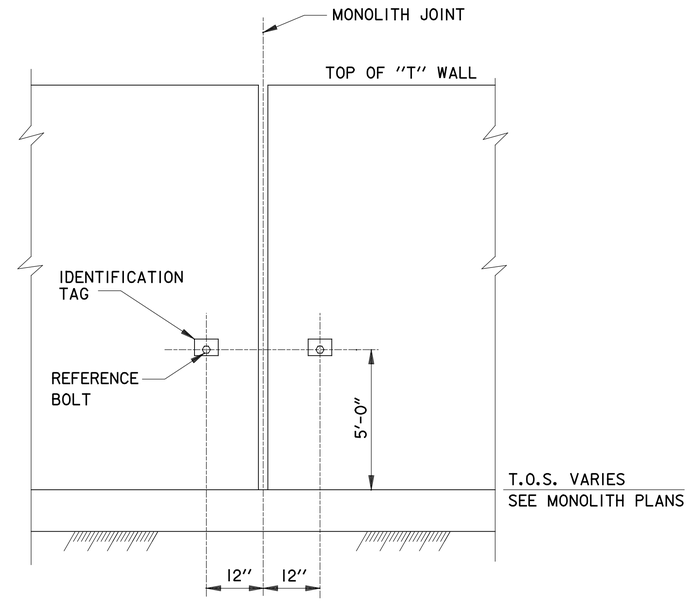

PROTECTED SIDE

TYPICAL ELEVATION OF SETTLEMENT REFERENCE MARKER

SCALE: N.T.S.

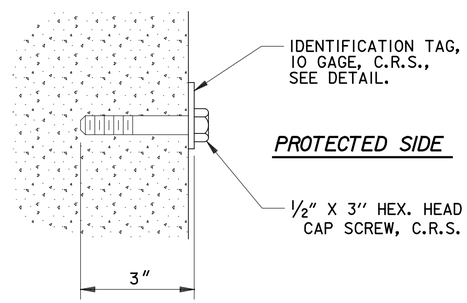

REFERENCE BOLT

SCALE: 6" = 1'-0"

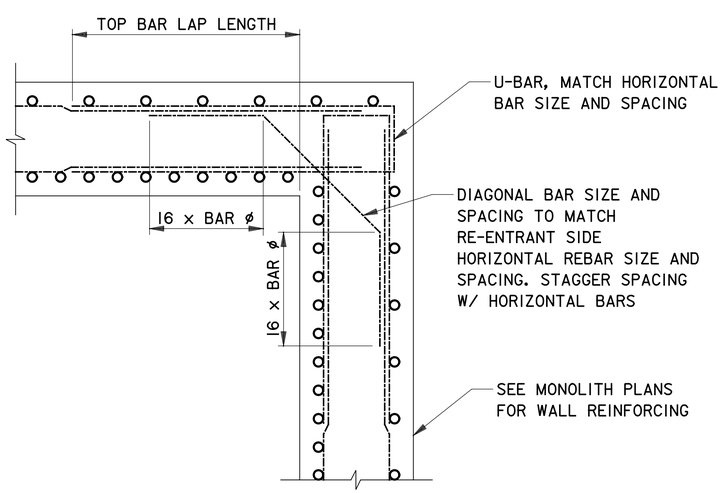

TYPICAL CORNER REINFORCING DETAIL

SCALE: 1/2" = 1'-0"

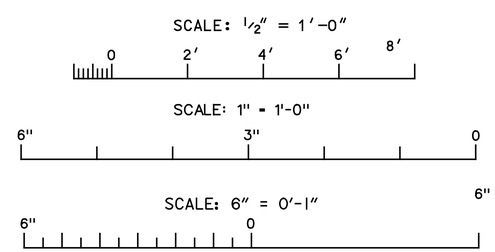

US Army Corps of Engineers®
NEW ORLEANS DISTRICT

MARK	DESCRIPTION	DATE	APPR.

MARK	DESCRIPTION	DATE	APPR.

U.S. ARMY CORPS OF ENGINEERS
NEW ORLEANS DISTRICT
NEW ORLEANS, LOUISIANA

URS
3500 N. Causeway Blvd.
Suite 900
Metairie, Louisiana 70002
(504) 837-6326
PROJECT No. 10001520.00001

DESIGNED BY: NC
DWN BY: S.D.C.
CKD BY: R.J.G.
SUBMITTED BY: ROY THOMAS
PLOT SCALE: 12
PLOT DATE: 7/24/2008
SIZE: ANSI D
FILE NAME: s-22.dgn
DATE: 2/28/2008
SOLICITATION NO.: W912P8-00-B-XXXX
CONTRACT NO.: W912P8-07-D-0047
FILE NUMBER: H-NN-NNNNN

WEST BANK AND VICINITY, NEW ORLEANS, LOUISIANA
HURRICANE PROTECTION PROJECT
ENGINEERING ALTERNATIVE REPORT
FOR THE ENLARGEMENT OF HURRICANE PROTECTION
ALGIERS CANAL INDUSTRIAL REACH, PHASE 2
STA. 980+00 to STA. 1230+00
T-WALL MONOLITH
MISCELLANEOUS DETAILS

SHEET IDENTIFICATION
S-22

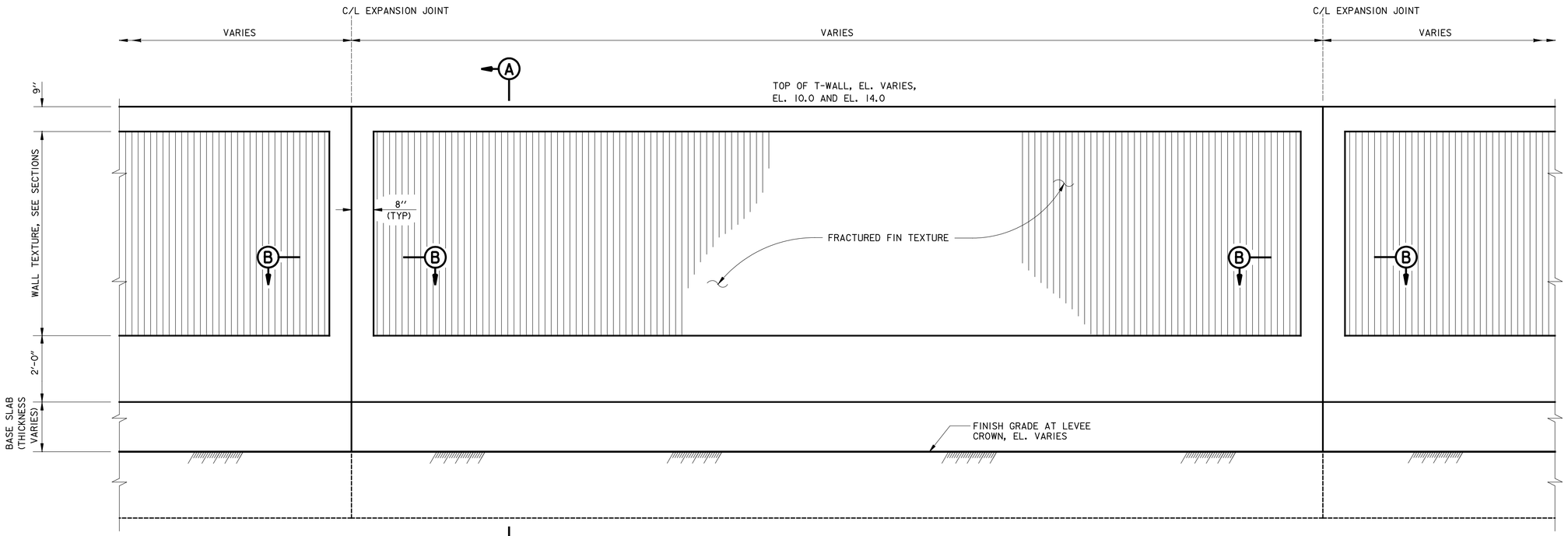

TYPICAL T-WALL ELEVATION
PROTECTED SIDE TEXTURE FINISH

SCALE: 3/4" = 1'- 0"

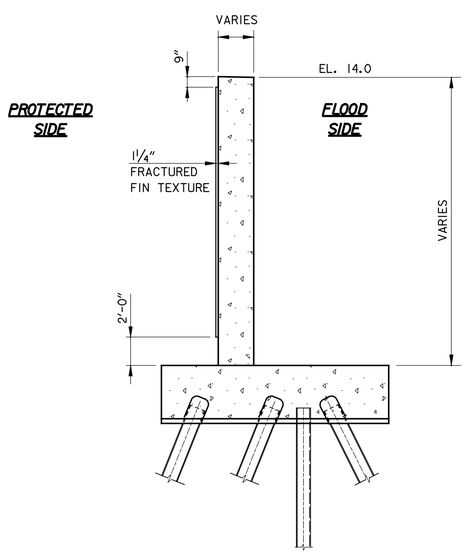

SECTION A

SCALE: 1/4" = 1'- 0"

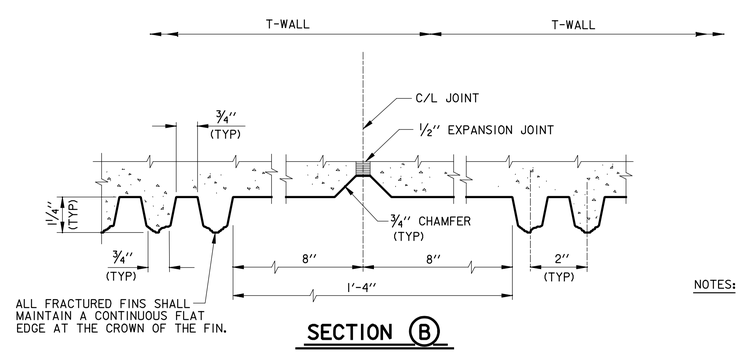

SECTION B
TYPICAL TEXTURE AT EXPANSION JOINTS

SCALE: 6" = 1' - 0"

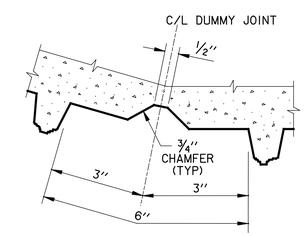

SPECIAL TEXTURE AT P.I.

SCALE: 6" = 1' - 0"

NOTES:

1. ALL FORM TIE BOLTS SHALL BE PLACED IN THE VALLEY OF THE FRACTURED FIN TEXTURE (i.e., BETWEEN ADJACENT FINS).
2. CONTRACTOR SHALL MAKE ALL EFFORTS TO MINIMIZE THE OCCURRENCE OF BUTT JOINTS. CONTRACTOR SHALL SUBMIT, FOR PRIOR APPROVAL, DRAWINGS SHOWING THE LOCATION OF ALL BUTT JOINTS IN FORMS USED FOR CONSTRUCTION.
3. NO FRACTURED FIN ON FLOOD SIDE.

SCALE: 3/4" = 1'- 0"

12" 0 1' 2' 3' 4' 5'

SCALE: 6" = 1' - 0"

6" 0 6"

US Army Corps of Engineers®
NEW ORLEANS DISTRICT

MARK	DESCRIPTION	DATE	APPR.

MARK	DESCRIPTION	DATE	APPR.

U.S. ARMY CORPS OF ENGINEERS
NEW ORLEANS DISTRICT
NEW ORLEANS, LOUISIANA

URS
3500 N. Causeway Blvd.
Suite 900
Metairie, Louisiana 70002
(504) 837-8326
PROJECT No. 10001520.00001

DESIGNED BY: NC
DWN BY: SDC
CKD BY: RJG
SUBMITTED BY: ROY THOMAS
PLOT SCALE: 64
PLOT DATE: 7/24/2008
SIZE: ANSI D
FILE NAME: s-23.dgn
DATE: 2/28/2008
SOLICITATION NO.: W912P8-00-B-XXXX
CONTRACT NO.: W912P8-07-D-0047
FILE NUMBER: H-NN-NNNNN

WEST BANK AND VICINITY, NEW ORLEANS, LOUISIANA
HURRICANE PROTECTION PROJECT
ENGINEERING ALTERNATIVE REPORT
FOR THE ENLARGEMENT OF HURRICANE PROTECTION
ALGIERS CANAL INDUSTRIAL REACH, PHASE 2
STA. 980+00 to STA. 1230+00
T-WALL TEXTURE
FINISH DETAILS

SHEET IDENTIFICATION
S-23

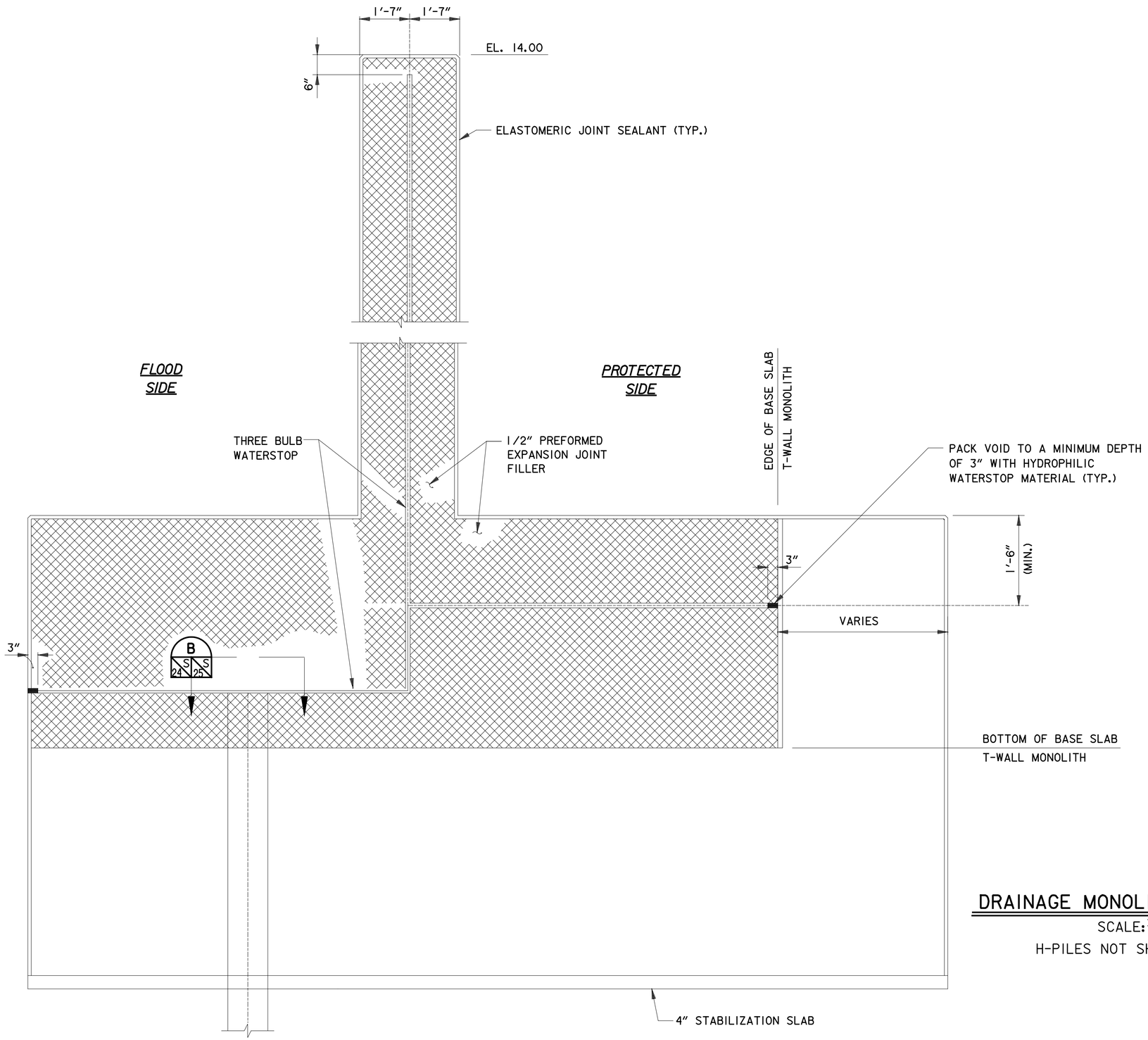

DRAINAGE MONOLITHS JOINT DETAIL

SCALE: 3/4"=1'-0"

H-PILES NOT SHOWN FOR CLARITY

US Army Corps of Engineers®
NEW ORLEANS DISTRICT

MARK	DESCRIPTION	DATE	APPR.

MARK	DESCRIPTION	DATE	APPR.

U.S. ARMY CORPS OF ENGINEERS
NEW ORLEANS DISTRICT
NEW ORLEANS, LOUISIANA

URS
3500 N. Causeway Blvd.
Suite 900
Metairie, Louisiana 70002
(504) 837-8326
PROJECT No. 10001520.00001

DESIGNED BY: NC
DWN BY: SDC
CKD BY: RJG
SUBMITTED BY: ROY THOMAS
PLOT SCALE: 48
PLOT DATE: 7/24/2008
SIZE: ANSI D
FILE NAME: s-24.dgn
DATE: 2/28/2008
SOLICITATION NO.: W912P8-00-B-XXXX
CONTRACT NO.: W912P8-07-D-0047
FILE NUMBER: H-NN-NNNNN

WEST BANK AND VICINITY, NEW ORLEANS, LOUISIANA
HURRICANE PROTECTION PROJECT
ENGINEERING ALTERNATIVE REPORT
FOR THE ENLARGEMENT OF HURRICANE PROTECTION
ALGIERS CANAL INDUSTRIAL REACH, PHASE 2
STA. 980+00 to STA. 1230+00
JOINT DETAILS AT
DRAINAGE MONOLITHS

SHEET IDENTIFICATION
S-24

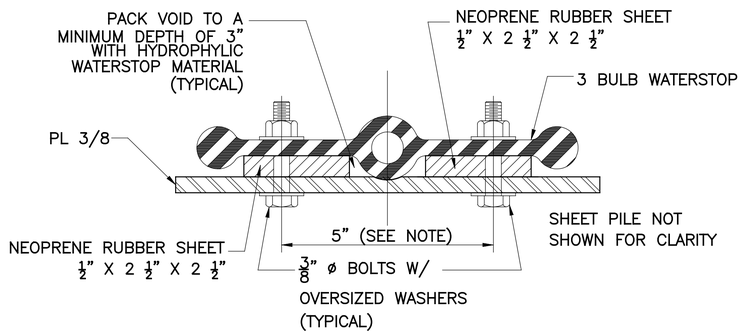

SECTION C

SCALE: 6'' = 1' – 0''

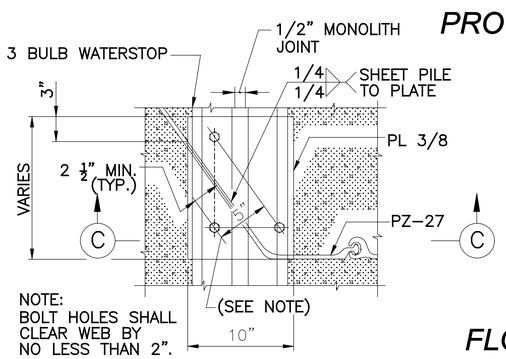

CONDITIONS WHERE SHEET PILE JOINT AND MONOLITH JOINT DO NOT ALIGN

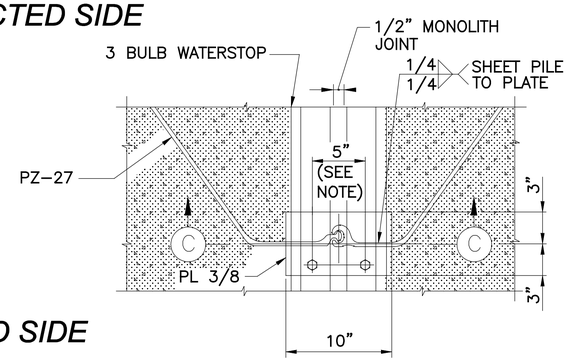

CONDITIONS WHERE SHEET PILE JOINT AND MONOLITH JOINT ALIGN

SECTION B/S-24/S-25 B/S-27/S-25

SCALE: 3"= 1'-0"

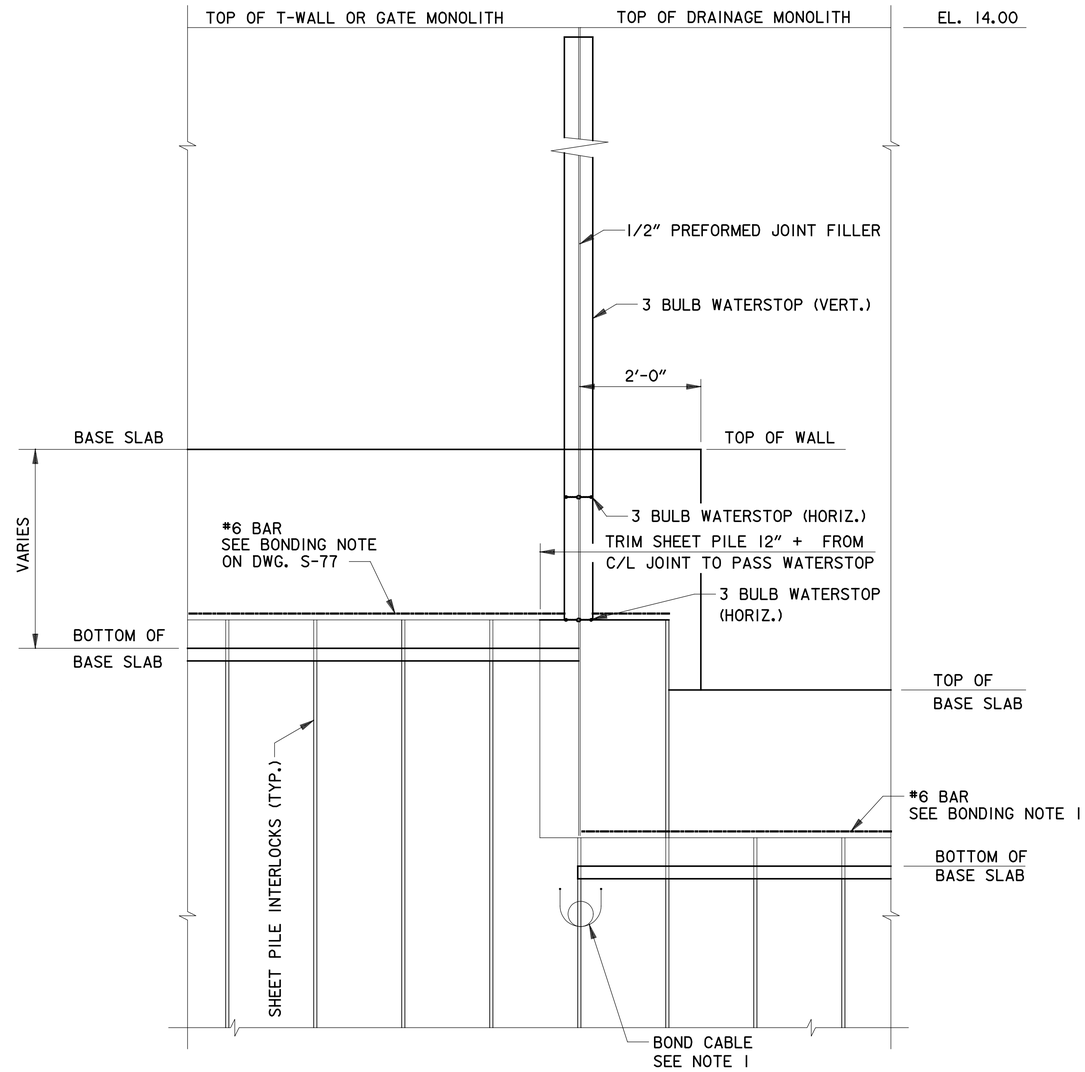

FLOOD SIDE ELEVATION

T-WALL OR GATE TO DRAINAGE MONOLITH

SCALE: ½"=1'-0"

NOTE:

1. #6 REINFORCING BAR TO BE WELDED TO THE TOP OF EACH STEEL SHEET PILE. THE #6 REINFORCING BAR SHALL NOT EXTEND ACROSS THE MONOLITH JOINT. INSTALL BOND CABLE AT ALL T-WALL JOINTS. BOND CABLE SHALL HAVE AN 8" DIAMETER LOOP TO ALLOW FOR STRESSES. BOND CABLES SHALL BE WELDED AS SPECIFIED TO ADJACENT STEEL PILES 12" BELOW THE BOTTOM OF BASE SLAB FOR T-WALL JOINTS. WELDED CONNECTIONS SHALL BE COATED WITH SPLICING EPOXY TO OBTAIN MOISTURE PROOF JOINT. SEE SPECIFICATIONS.

SCALE: ½'' = 1'- 0''

12'' 0 2' 4' 6' 8'

SCALE: 3'' = 1' - 0''

12'' 0 1'

SCALE: 6'' = 1' - 0''

6'' 0 6''

US Army Corps of Engineers®
NEW ORLEANS DISTRICT

MARK	DESCRIPTION	DATE	APPR.	MARK	DESCRIPTION	DATE	APPR.

U.S. ARMY CORPS OF ENGINEERS
NEW ORLEANS DISTRICT
NEW ORLEANS, LOUISIANA

URS
3600 N. Causeway Blvd. Suite 900
Metairie, Louisiana 70002
(504) 837-8328
PROJECT No. 10001520.00001

DESIGNED BY: NC
DWN BY: SDC
CKD BY: RJG
SUBMITTED BY: ROY THOMAS
PLOT SCALE: 48
SIZE: ANSI D
DATE: 2/28/2008
SOLICITATION NO.: W912P8-09-B-XXXX
CONTRACT NO.: W912P8-07-D-0047
FILE NUMBER: H-NN-NNNNNN
PLOT DATE: 7/24/2008
FILE NAME: s-25.dgn

WEST BANK AND VICINITY, NEW ORLEANS, LOUISIANA
HURRICANE PROTECTION PROJECT
ENGINEERING ALTERNATIVE REPORT
FOR THE ENLARGEMENT OF HURRICANE PROTECTION
ALGIERS CANAL INDUSTRIAL REACH, PHASE 2
STA. 980+00 to STA. 1230+00
JOINT DETAILS AT DRAINAGE MONOLITHS

SHEET IDENTIFICATION
S-25

Safety is a Part of Your Contract

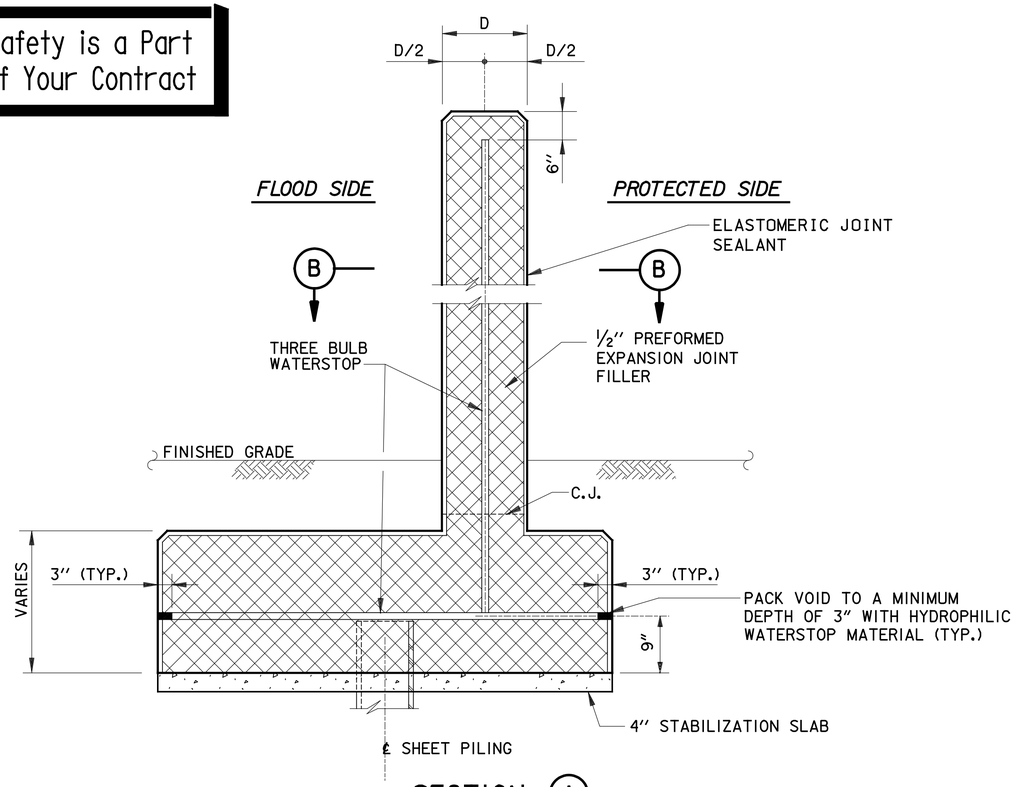

SECTION (A)

TYPICAL T-WALL JOINT

SCALE: 3/4" = 1'-0"

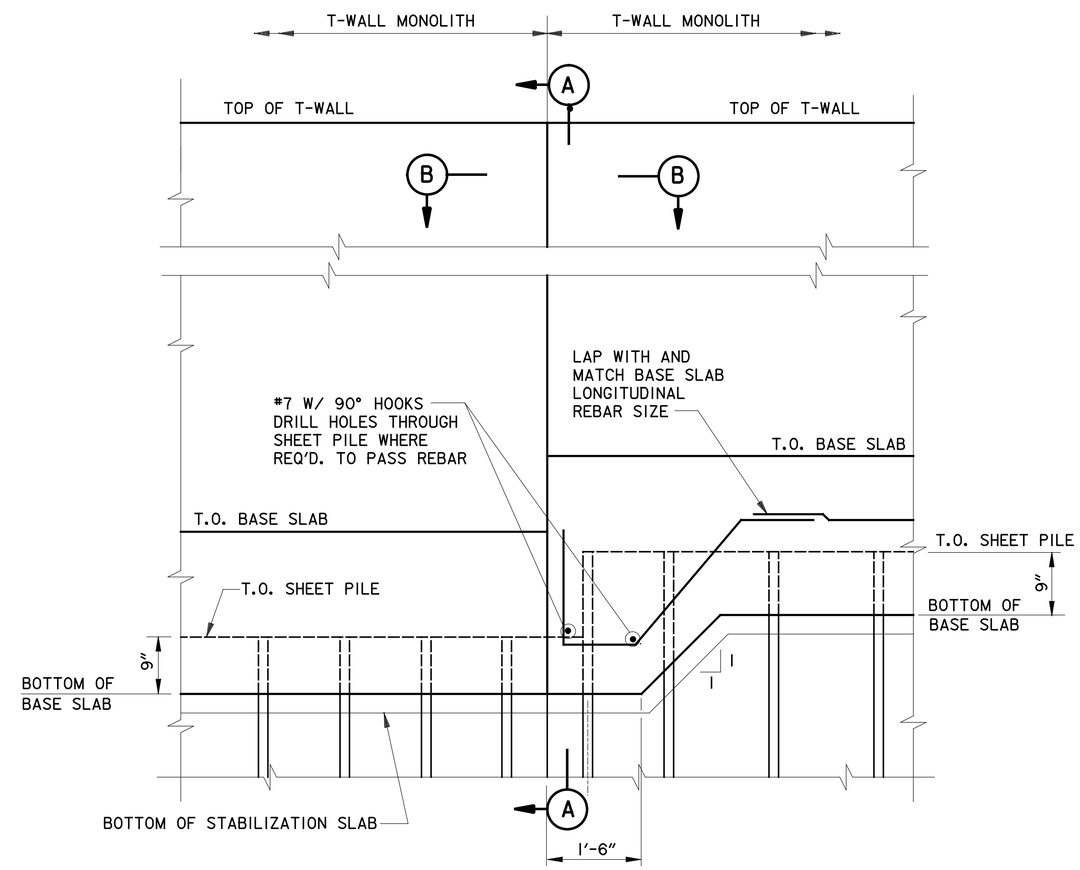

TYPICAL JOINT ELEVATION WHERE T-WALL MONOLITHS HAVE DIFFERING BASE SLAB ELEVATIONS

SCALE: 3/4" = 1'-0"

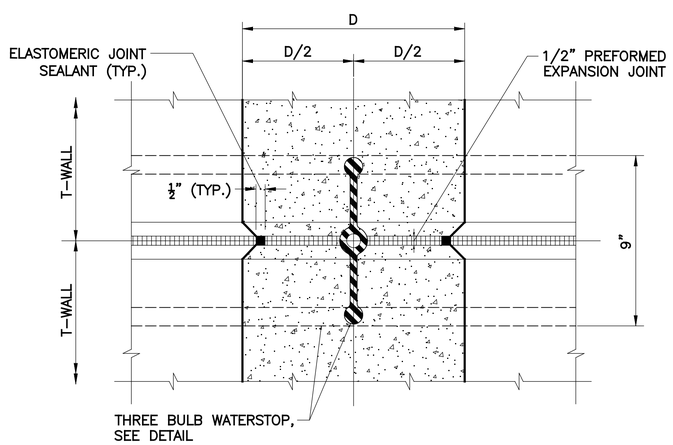

SECTION (B)

TYPICAL VERTICAL EXPANSION JOINT DETAIL

SCALE: 3 " = 1'-0"

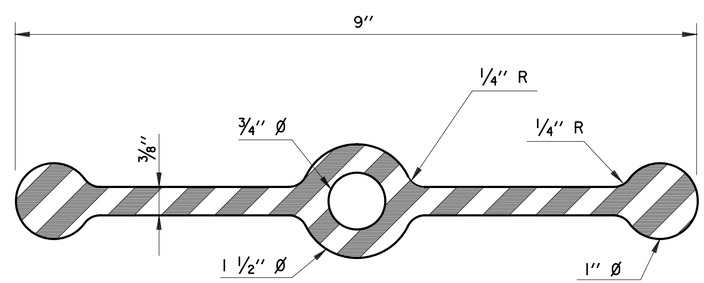

THREE BULB WATERSTOP

SCALE: 12" = 1'-0"

SCALE: 1 1/2" = 1' - 0"

12" 0 1' 2' 3'

SCALE: 3/4" = 1'- 0"

12" 0 1' 2' 3' 4' 5'

SCALE: 3" = 1' - 0"

12" 0 1'

US Army Corps of Engineers®
NEW ORLEANS DISTRICT

MARK	DESCRIPTION	DATE	APPR.	MARK	DESCRIPTION	DATE	APPR.

U.S. ARMY CORPS OF ENGINEERS
NEW ORLEANS DISTRICT
NEW ORLEANS, LOUISIANA

URS
3500 N. Causeway Blvd.
Suite 900
Metairie, Louisiana 70002
(504) 837-4308
PROJECT No. 10001500.00001

DESIGNED BY:	DATE: 2/28/2008
DWN BY:	CKD BY: RJG
SUBMITTED BY: ROY THOMAS	SOLICITATION NO.: W912P8-00-B-XXXX
PLOT SCALE: 1:1	PLOT DATE: 2/27/2008
	CONTRACT NO.: W912P8-07-D-0047
	FILE NUMBER: H-NN-NNNNN
SIZE: ANSI D	FILE NAME: s-26.dgn

WEST BANK AND VICINITY, NEW ORLEANS, LOUISIANA
HURRICANE PROTECTION PROJECT
ENGINEERING ALTERNATIVE REPORT
FOR THE ENLARGEMENT OF HURRICANE PROTECTION
ALGIERS CANAL INDUSTRIAL REACH, PHASE 2
STA. 980+00 to STA. 1230+00
T-WALL MONOLITH
JOINT DETAILS

SHEET IDENTIFICATION
S-26

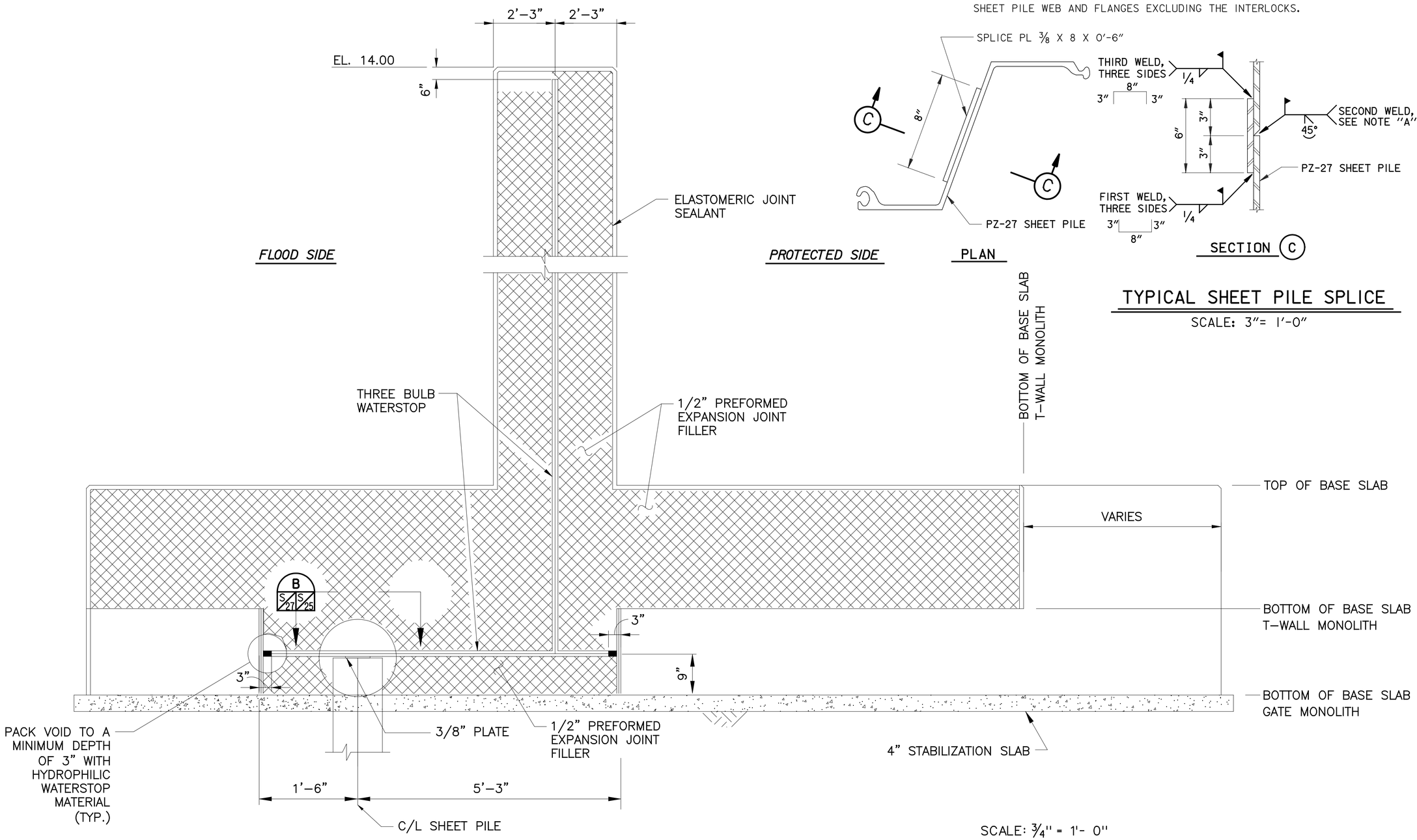

TYPICAL JOINT AT GATE MONOLITHS

SCALE: 3/4"= 1'-0"
H-PILES NOT SHOWN FOR CLARITY

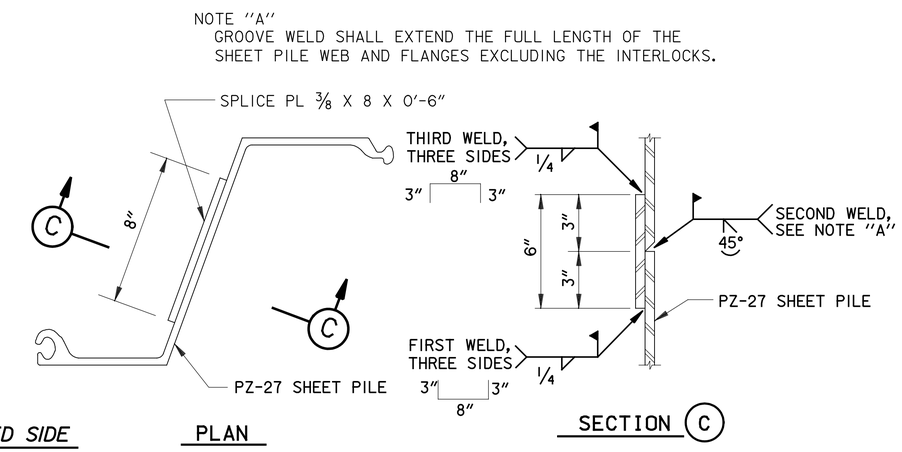

TYPICAL SHEET PILE SPLICE

SCALE: 3"= 1'-0"

SCALE: 3/4" = 1'- 0"

12" 0 1' 2' 3' 4' 5'

SCALE: 3" = 1' - 0"

12" 0 1'

US Army Corps of Engineers®
NEW ORLEANS DISTRICT

MARK	DESCRIPTION	DATE	APPR.	MARK	DESCRIPTION	DATE	APPR.

U.S. ARMY CORPS OF ENGINEERS
NEW ORLEANS DISTRICT
NEW ORLEANS, LOUISIANA

URS
3500 N. Causeway Blvd.
Suite 900
Metairie, Louisiana 70002
(504) 837-6328
PROJECT No. 10001500.00001

DESIGNED BY: NC	DATE: 2/28/2008
DWN BY: SDC	CKD BY: RJG
SOLICITATION NO.: W912PB-09-B-XXXX	
SUBMITTED BY: ROY THOMAS	CONTRACT NO.: W912PB-07-D-0047
PLOT SCALE: 1:1	PLOT DATE: 7/24/2009
FILE NUMBER: H-NN-NNNNN	
SIZE: ANSI D	FILE NAME: s-27.dgn

WEST BANK AND VICINITY, NEW ORLEANS, LOUISIANA
HURRICANE PROTECTION PROJECT
ENGINEERING ALTERNATIVE REPORT
FOR THE ENLARGEMENT OF HURRICANE PROTECTION
ALGIERS CANAL INDUSTRIAL REACH, PHASE 2
STA. 980+00 to STA. 1230+00
T-WALL MONOLITH
JOINT DETAILS

SHEET IDENTIFICATION
S-27