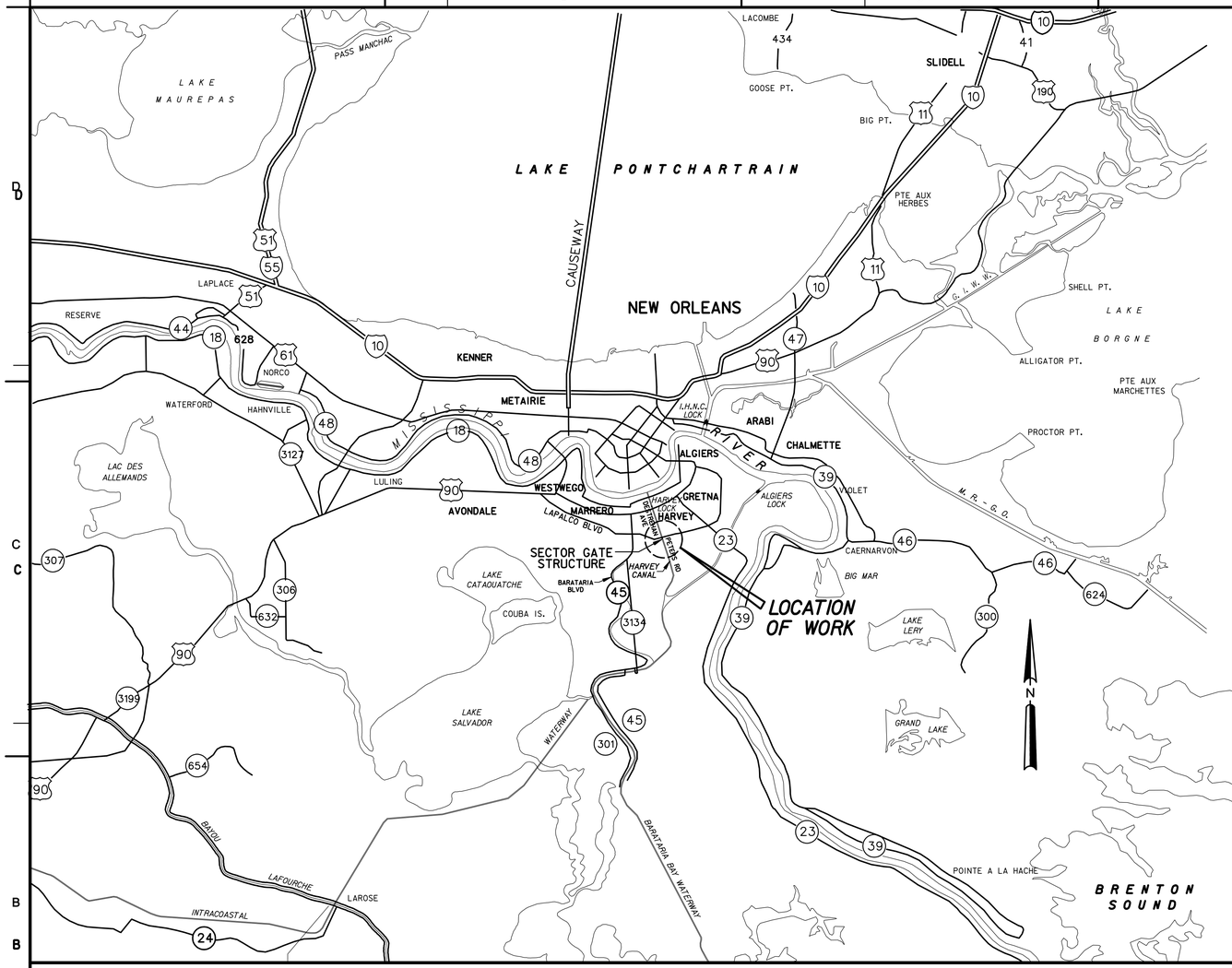

LOCATION MAP

SCALE OF MILES

5 0 5 10 15 20 MILES

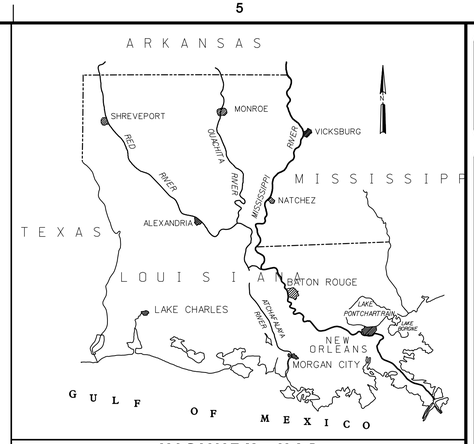

VICINITY MAP

SCALE OF MILES

40 0 40 80 120 160 200

TABULATION OF BENCH MARK

DESIGNATION	DESCRIPTION	ELEVATION
T-368 (1984)	2.4 KM (1.5 MI) NORTHERLY ALONG STATE HIGHWAY 45 (BARATARIA BOULEVARD) FROM JUNCTION OF STATE HIGHWAY 3134 IN MARRERO, THENCE 2.5 km (1.55 MILES) EASTERLY ALONG LAPALCO BOULEVARD, IN TOP OF AND 0.6 M (2.0 FEET) NORTH OF THE SOUTH END OF THE SOUTH CONCRETE CURB OF THE BOULEVARD BRIDGE SPANNING HARVEY CANAL, 5.0 M (16.4 FEET) SOUTH OF THE CENTERLINE OF THE EASTBOUND LANES OF THE BOULEVARD, 1.2 M (3.9 FEET) EAST OF THE WEST END OF THE CURB, AND 0.3 M (1.0 FEET) ABOVE THE LEVEL OF THE BOULEVARD.	5.31 NAVD 88 2004.65
Q368	1.7 KM (1.5 MI) WEST ALONG LAPALCO BOULEVARD FROM THE JUNCTION OF STATE HIGHWAY 45 (BARATARIA BOULEVARD) IN MARRERO, AT THE ENTRANCE TO MARRERO SEWER TREATMENT PLANT WHICH IS ON THE WEST SIDE OF OUTFALL CANAL, 21.48 METERS (70.5 FEET) NORTH OF THE CENTERLINE OF LAPALCO BOULEVARD 6.94 METERS (22.8 FEET) EAST OF THE CENTER OF THE DOUBLE SECURITY ENTRANCE GATE TO THE SEWER PLANT, 14.93 METERS (49.0 FEET) WEST AND 0.45 METER (1.5 FEET) SOUTH OF THE SECURITY FENCE. NOTE, DRIVING RATE METAIRIE ROAD ANCHORED. THE MARK IS 0.42 METERS (1.4 FEET) SOUTH FROM A WITNESS POST. THE MARK IS 0.46 METERS (1.5 FEET) M BELOW LAPALCO BOULEVARD.	2.329 (NAVD 88)
U368	2.4 KM (1.5 MI) NORTHERLY ALONG STATE HIGHWAY 45 (BARATARIA BOULEVARD) FROM JUNCTION OF STATE HIGHWAY 3134 IN MARRERO, THENCE 4 km (2.10 MILES) EASTERLY ALONG LAPALCO BOULEVARD, IN TOP OF AND 0.7 M (2.3 FEET) NORTH OF THE SOUTH END OF THE EAST CONCRETE ABUTMENT OF THE BOULEVARD BRIDGE SPANNING MURPHY CANAL, 8.7 M (28.5 FEET) SOUTH OF THE CENTERLINE OF THE EASTBOUND LANES OF THE BOULEVARD, 0.9 M (3.0 FEET) WEST OF THE EAST EDGE OF THE ABUTMENT, AND 0.3 M (1.0 FEET) ABOVE THE LEVEL OF THE BOULEVARD.	-0.24 (NAVD88 2004.65)

WEST BANK AND VICINITY
HURRICANE PROTECTION PROJECT
WBV - 46.2
HARVEY CANAL SECTOR GATE, PHASE II
JEFFERSON PARISH, LA

US Army Corps of Engineers®
NEW ORLEANS DISTRICT

MARK	DESCRIPTION	DATE	APPR.

MARK	DESCRIPTION	DATE	APPR.

U.S. ARMY CORPS OF ENGINEERS
NEW ORLEANS DISTRICT
NEW ORLEANS, LOUISIANA

DESIGNED BY: Joe A. Designer
DATE: DD-MON-YYYY
DWN BY: XXX
CKD BY: XXX
SOLICITATION NO.: W912P8-##-X-####
SUBMITTED BY: Bob A. Submitter
CONTRACT NO.: W912P8-##-X-####
PLOT SCALE: AS NOTED
PLOT DATE: DD-MMM-YYYY
FILE NUMBER: H-##-#####
SIZE: ANSI D
FILE NAME: XXXXXXXXX.dgn

WEST BANK AND VICINITY, HURRICANE PROTECTION PROJECT
WBV - 46.2
HARVEY CANAL SECTOR GATE
PHASE II
JEFFERSON PARISH, LOUISIANA

VICINITY MAP

SHEET IDENTIFICATION
1-1 OF 1-15

INDEX TO DRAWINGS

DWG	TITLE
1-1	LOCATION AND VICINITY MAP
1-2	INDEX TO DRAWINGS
1-3	ALTERNATIVE 1 SITE PLAN
1-4	GATE MONOLITH - ALT. 1
1-5	GATE MONOLITH - ALT. 1 (SECTION LOOKING NORTH)
1-6	GATE MONOLITH - ALT. 1 (SECTION LOOKING SOUTH)
1-7	GATE MONOLITH WALL SECTIONS
1-8	ALT. 1 SOIL MIXING
1-9	STORAGE PLATFORM DEMO DETAILS
1-10	STORAGE PLATFORM NEW ADDITION DETAILS
1-11	STEEL SECTOR GATE PLAN
1-12	STEEL SECTOR GATE CHANNEL TRUSS ELEVATION
1-13	STEEL SECTOR GATE WALKWAY PLAN
1-14	STEEL PARAPET EXTENSION AND WALKWAY SECTIONS
1-15	T-WALLS T-1 TO T-4
1-16	TRS FOR T-WALLS T-1 TO T-4
1-17	T-WALL SECTIONS
1-18	T-WALL SECTIONS
2-1	ALTERNATIVE 2A SITE PLAN
2-2	GATE MONOLITH ALT. 2A MASONRY PLAN
2-3	ALTERNATIVE 2B SITE PLAN
2-4	GATE MONOLITH ALT. 2B MASONRY PLAN
2-5	SECTOR GATE, U-FRAME AND T-WALL PILE LAYOUT
2-6	GATE, U-FRAME AND T-WALL SECTION
2-7	SLAB EXTENSION DETAIL, ALT 2B
2-8	FRONTING T-WALLS, PLAN AND SECTION
2-9	U-FRAME, PLAN AND SECTION
2-10	TRS FOR U-FRAME, C T-WALL ALT 2A
2-11	GATE MONOLITH ALT. 2B MASONRY PLAN
R-1	RIGHT OF WAY SITE PLAN
R-2	RIGHT OF WAY STAGING AREA PLAN

US Army Corps of Engineers®
NEW ORLEANS DISTRICT

MARK	DESCRIPTION	DATE	APPR.

MARK	DESCRIPTION	DATE	APPR.

U.S. ARMY CORPS OF ENGINEERS
NEW ORLEANS DISTRICT
NEW ORLEANS, LOUISIANA

DESIGNED BY: Joe A. Designer
DWN BY: XXX
CKD BY: XXX
SUBMITTED BY: Bob A. Submitter
PLOT SCALE: 1:1
PLOT DATE: MM/DD/YYYY
SIZE: ANSI D
FILE NAME: XXXXXXXX.dgn
DATE: DD-MON-YYYY
SOLICITATION NO.: W912PS-##-X-####
CONTRACT NO.: W912PS-##-X-####
FILE NUMBER: H-##-#####

WEST BANK AND VICINITY, HURRICANE PROTECTION PROJECT
WBV - 46.2
HARVEY CANAL SECTOR GATE
PHASE II
JEFFERSON PARISH, LOUISIANA

INDEX

SHEET IDENTIFICATION
1-2 OF 1-18

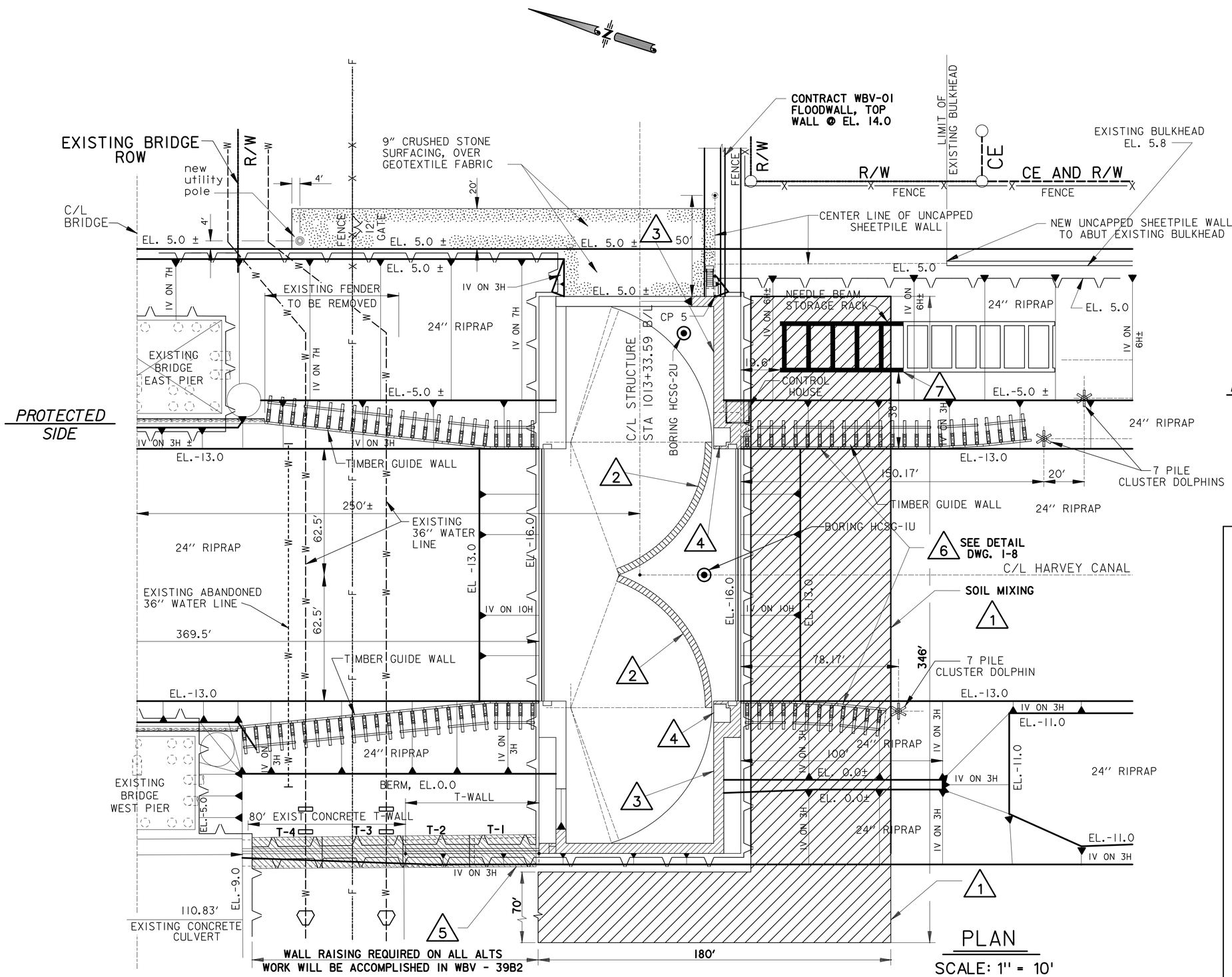

PLAN

SCALE: 1" = 10'

ALTERNATIVE I

RAISE EXISTING GATES AND WEST T-WALLS

1. ADD SOIL MIXING
2. RAISE STEEL SECTOR GATE SKIN PLATE AND WALKWAY TO EL. 14.0
3. ADD PARAPET CONCRETE WALL WITH BUTTRESSES TO EL. 14.0
4. RAISE GATE MACHINERY & ELECTRICAL BOXES IN CONTROL HOUSE
5. RAISE/REPLACE EXISTING T-WALLS
6. REMOVE & REPLACE GUIDEWALL TO ACCOMODATE SOIL MIXING
7. PARTIAL DEMOLITION OF STORAGE RACK (SEE DWG 1-8)

US Army Corps of Engineers®
NEW ORLEANS DISTRICT

MARK	DESCRIPTION	DATE	APPR.

U.S. ARMY CORPS OF ENGINEERS
NEW ORLEANS DISTRICT
NEW ORLEANS, LOUISIANA

DESIGNED BY: Joe A. Designer
DWN BY: XXX
CKD BY: XXX
SUBMITTED BY: Bob A. Submitter
PLOT SCALE: XXXX:1
PLOT DATE: MM/DD/YYYY
SIZE: ANSI D
FILE NAME: 45376-ALT1-DATE07-2007.dgn
DATE: DD-MON-YYYY
SOLICITATION NO.: W912P8-##-X-####
CONTRACT NO.: W912P8-##-X-####
FILE NUMBER: H-##-#####

WEST BANK AND VICINITY, HURRICANE PROTECTION PROJECT
WBV - 46.2
HARVEY CANAL SECTOR GATE
PHASE II
JEFFERSON PARISH, LOUISIANA

ALTERNATIVE I SITE PLAN

SHEET IDENTIFICATION
1-3 OF 1-18

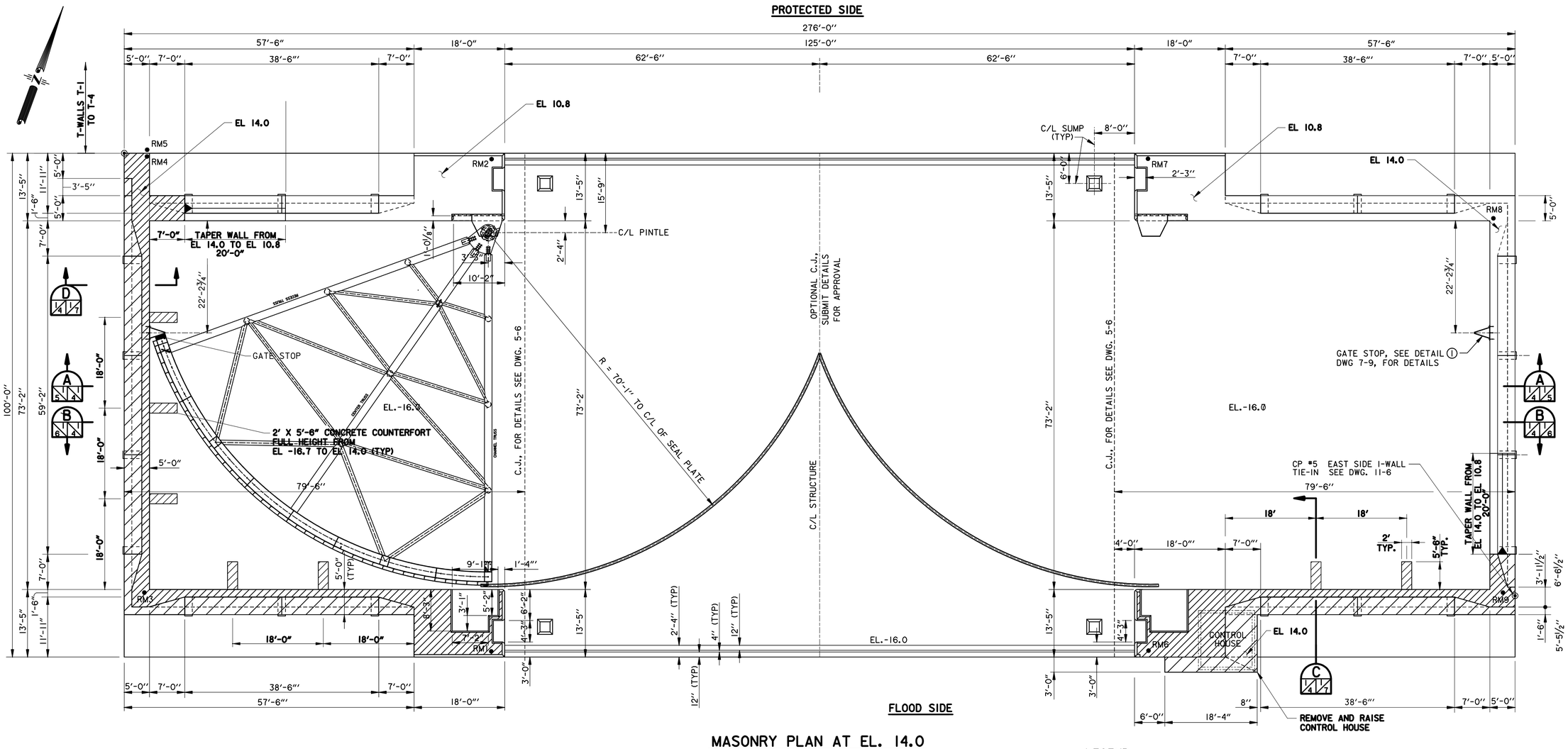

MASONRY PLAN AT EL. 14.0

SCALE: 3/32" = 1'- 0"

LEGEND

RAISE CONCRETE WALLS FROM EL 10.8 NAVD TO EL 14.0 NAVD.

SCALE: 3/32" = 1'- 0"

0 5' 10' 15' 20' 25'

SCALE: 6" = 1' - 0"

6" 0 6"

NOTES:

1. CONCRETE NOTES, SEE DWG. 1-4.
2. PILE FOUNDATION AND SHEET PILING CUT-OFF WALL, SEE DWG. 4-1.

US Army Corps of Engineers®
NEW ORLEANS DISTRICT

MARK	DESCRIPTION	DATE	APPR.

MARK	DESCRIPTION	DATE	APPR.

U.S. ARMY CORPS OF ENGINEERS
NEW ORLEANS DISTRICT
NEW ORLEANS, LOUISIANA

DESIGNED BY: Joe A. Designer
DWN BY: XXX
CKD BY: XXX
SUBMITTED BY: Bob A. Submitter
PLOT SCALE: XXXX:1
PLOT DATE: MM/DD/YYYY
SIZE: ANSI D
FILE NAME: XXXXXXXX.dgn
DATE: DD-MON-YYYY
SOLICITATION NO.: W912P8-##-X-####
CONTRACT NO.: W912P8-##-X-####
FILE NUMBER: H-##-#####

WEST BANK AND VICINITY, HURRICANE PROTECTION PROJECT
WBV - 46.2
HARVEY CANAL SECTOR GATE
PHASE II
JEFFERSON PARISH, LOUISIANA

GATE MONOLITH - ALT. I MASONRY PLAN

SHEET IDENTIFICATION
1-4 OF 1-18

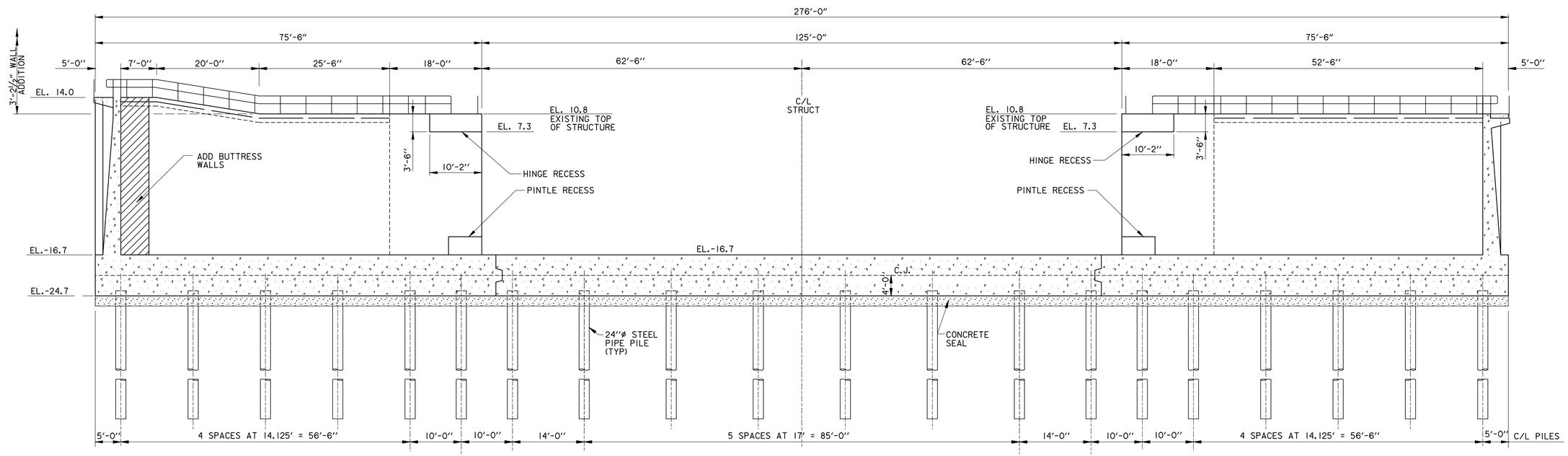

SECTION A 1/4 1/5

NOTE:

EXISTING PILE FOUNDATION IS ADEQUATE, SOIL MIXING WAS ADDED TO ELIMINATE THE UNBALANCED LOAD.

SCALE: 3/32" = 1'- 0"

0 10' 20' 30' 40' 50'

US Army Corps of Engineers®
NEW ORLEANS DISTRICT

MARK	DESCRIPTION	DATE	APPR.

MARK	DESCRIPTION	DATE	APPR.

U.S. ARMY CORPS OF ENGINEERS
NEW ORLEANS DISTRICT
NEW ORLEANS, LOUISIANA

DESIGNED BY: Joe A. Designer	DATE: DD-MON-YYYY
DWN BY: XXX	CKD BY: XXX
SUBMITTED BY: Bob A. Submitter	SOLICITATION NO.: W912P8-##-X-####
PLOT SCALE: 1:1	CONTRACT NO.: W912P8-##-X-####
PLOT DATE: MM-DD-YYYY	FILE NUMBER: H-##-####
SIZE: ANSI D	FILE NAME: XXXXXXXX.dgn

WEST BANK AND VICINITY, HURRICANE PROTECTION PROJECT
WBV - 46.2
HARVEY CANAL SECTOR GATE
PHASE II
JEFFERSON PARISH, LOUISIANA

GATE MONOLITH-ALT. I SECTION (LOOKING NORTH)

SHEET IDENTIFICATION
1-5 OF 1-18

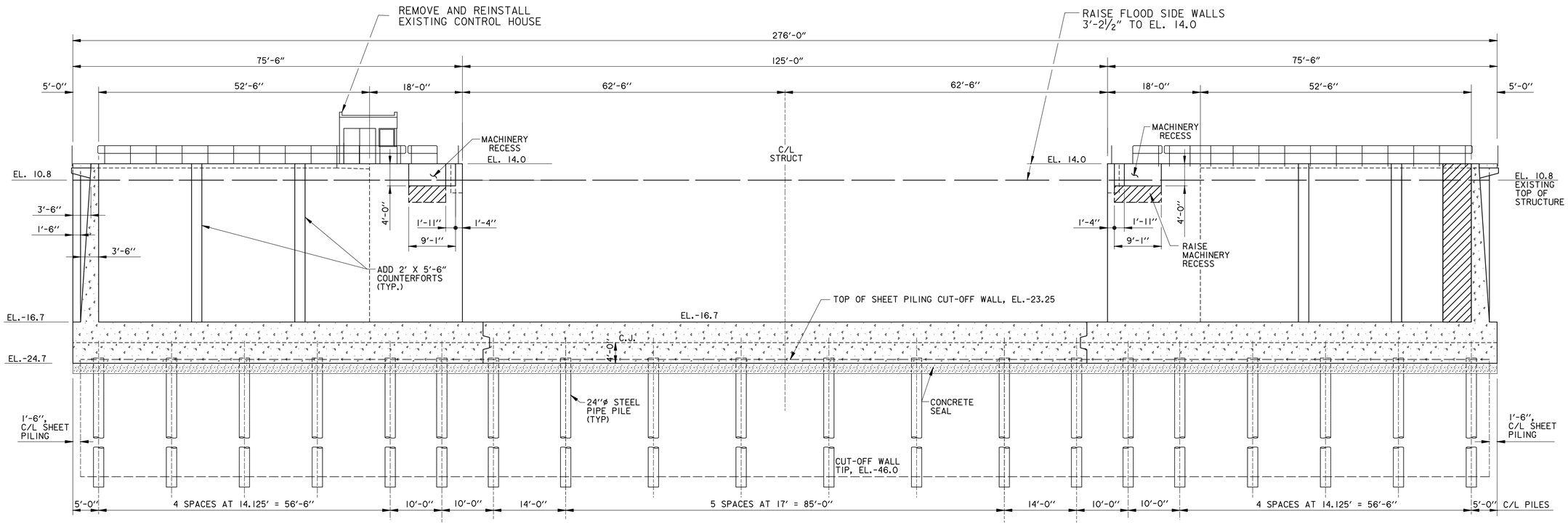

SECTION B 1/4 1/6

SCALE: 3/32" = 1'- 0"

0 10' 20' 30' 40' 50'

US Army Corps of Engineers®
NEW ORLEANS DISTRICT

MARK	DESCRIPTION	DATE	APPR.	MARK	DESCRIPTION	DATE	APPR.

U.S. ARMY CORPS OF ENGINEERS
NEW ORLEANS DISTRICT
NEW ORLEANS, LOUISIANA

DESIGNED BY: Joe A. Designer
DATE: DD-MON-YYYY
DWN BY: XXX
CKD BY: XXX
SOLICITATION NO.: W912P8-##-X-####
SUBMITTED BY: Bob A. Submitter
CONTRACT NO.: W912P8-##-X-####
PLOT SCALE: 1:1
PLOT DATE: MM/DD/YYYY
FILE NUMBER: ####-#####
SIZE: ANSI D
FILE NAME: XXXXXXXX.dgn

WEST BANK AND VICINITY, HURRICANE PROTECTION PROJECT
WBV - 46.2
HARVEY CANAL SECTOR GATE
PHASE II
JEFFERSON PARISH, LOUISIANA

GATE MONOLITH-ALT. I SECTION (LOOKING SOUTH)

SHEET IDENTIFICATION
1-6 OF 1-18

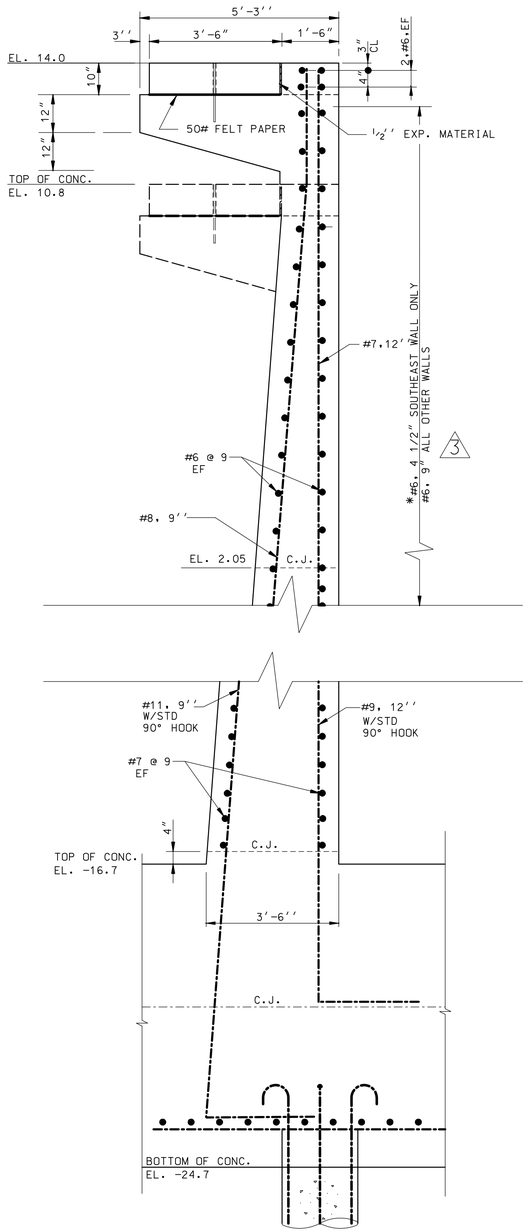

2 SECTION D/1/4 1/7 D/2/2 1/7
SCALE: 1/2'' = 1'- 0''

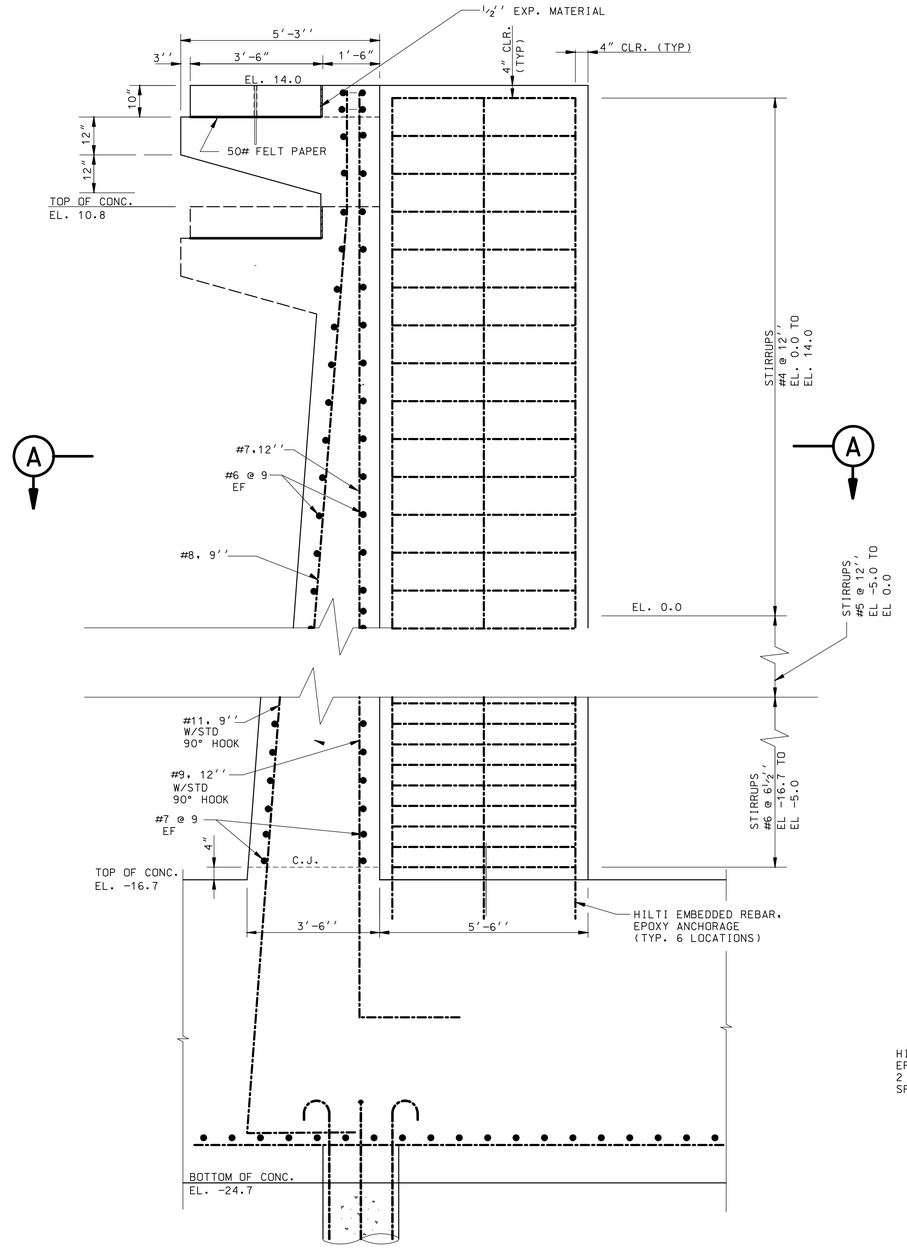

2 SECTION C/1/4 1/7 C/2/2 1/7
SCALE: 1/2'' = 1'- 0''

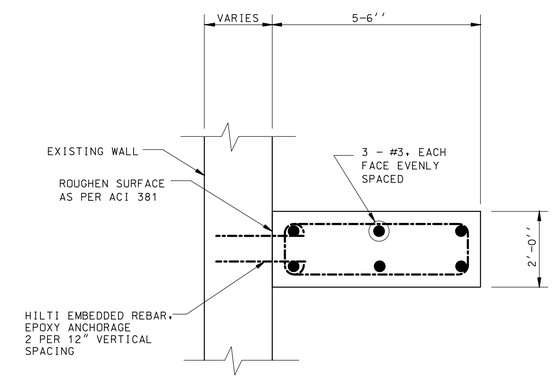

SECTION A
SCALE: 1/2'' = 1'- 0''

SCALE:1/2"=1'

0 1' 2' 4'

US Army Corps of Engineers®
NEW ORLEANS DISTRICT

MARK	DESCRIPTION	DATE	APPR.

MARK	DESCRIPTION	DATE	APPR.

U.S. ARMY CORPS OF ENGINEERS
NEW ORLEANS DISTRICT
NEW ORLEANS, LOUISIANA

DESIGNED BY: Joe A. Designer
DWN BY: XXX
CKD BY: XXX
SUBMITTED BY: Bob A. Submitter
PLOT SCALE: XXXX:1
PLOT DATE: MM/DD/YYYY
SIZE: ANSI D
FILE NAME: XXXXXXXX.dgn
DATE: DD-MON-YYYY
SOLICITATION NO.: W912P8-##-X-####
CONTRACT NO.: W912P8-##-X-####
FILE NUMBER: H-##-#####

WEST BANK AND VICINITY, HURRICANE PROTECTION PROJECT
WBV - 46.2
HARVEY CANAL SECTOR GATE
PHASE II
JEFFERSON PARISH, LOUISIANA

GATE MONOLITH WALL SECTIONS

SHEET IDENTIFICATION
1-7 OF 1-18

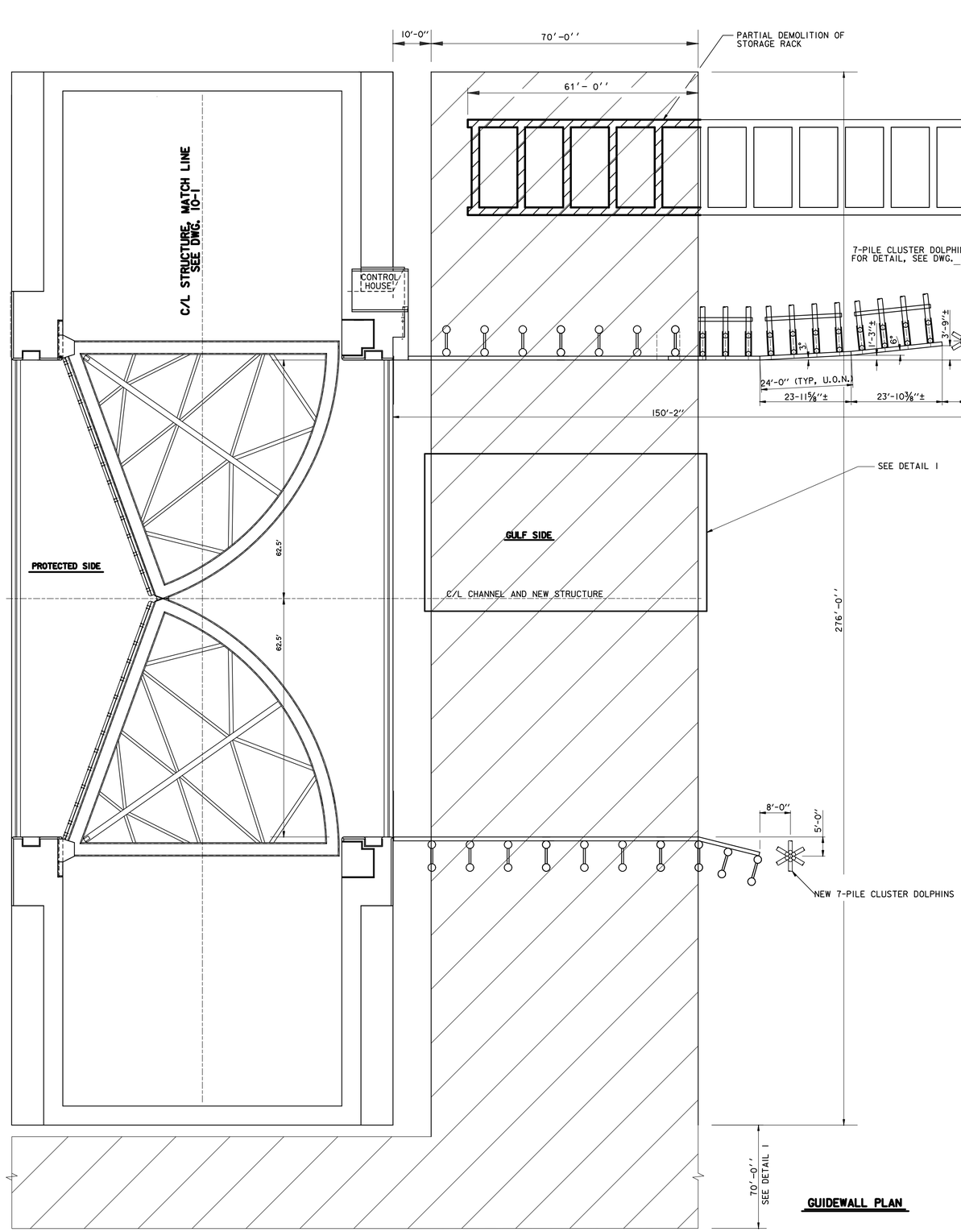

GUIDEWALL PLAN

SCALE:1/16"=1'

0 8' 16' 32'

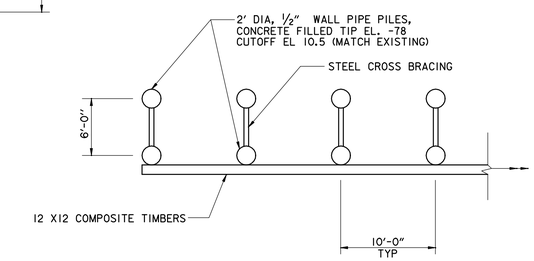

DETAIL 2

NOT TO SCALE

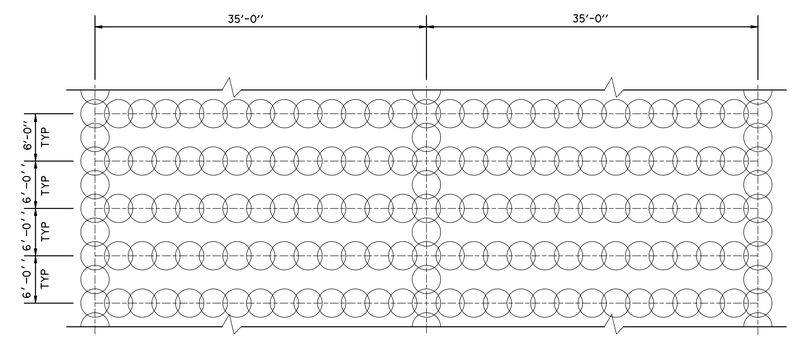

DETAIL 1

NOT TO SCALE

SOIL MIXING ZONE

NOTES:

DETAIL IS TYPICAL FOR FULL WIDTH OF SOIL MIXING ZONES. REQUIRED MASS STRENGTH OF 1000 PSF, 33% REPLACEMENT RATIO, F'c =120 PSI AT 28 DAYS, SOIL MIXING COLUMNS ARE 31.5" DIAMETER & EXTEND TO EL. -70 AND HAVE AN OVERLAP OF 6".

US Army Corps of Engineers®
NEW ORLEANS DISTRICT

MARK	DESCRIPTION	DATE	APPR.	MARK	DESCRIPTION	DATE	APPR.

U.S. ARMY CORPS OF ENGINEERS
NEW ORLEANS DISTRICT
NEW ORLEANS, LOUISIANA

DESIGNED BY: Joe A. Designer
DWN BY: XXX
CKD BY: XXX
SUBMITTED BY: Bob A. Submitter
PLOT SCALE: 1:1000
PLOT DATE: MM/DD/YYYY
SIZE: ANSI D
FILE NAME: XXXXXXXX.dgn
DATE: DD-MON-YYYY
SOLICITATION NO.: WS12RB-##-X-#####
CONTRACT NO.: WS12RB-##-X-#####
FILE NUMBER: H-##-#####

WEST BANK AND VICINITY, HURRICANE PROTECTION PROJECT
WBV - 46.2
HARVEY CANAL SECTOR GATE
PHASE II
JEFFERSON PARISH, LOUISIANA

ALTERNATIVE I
SOIL MIXING

SHEET IDENTIFICATION
1-8 OF 1-18

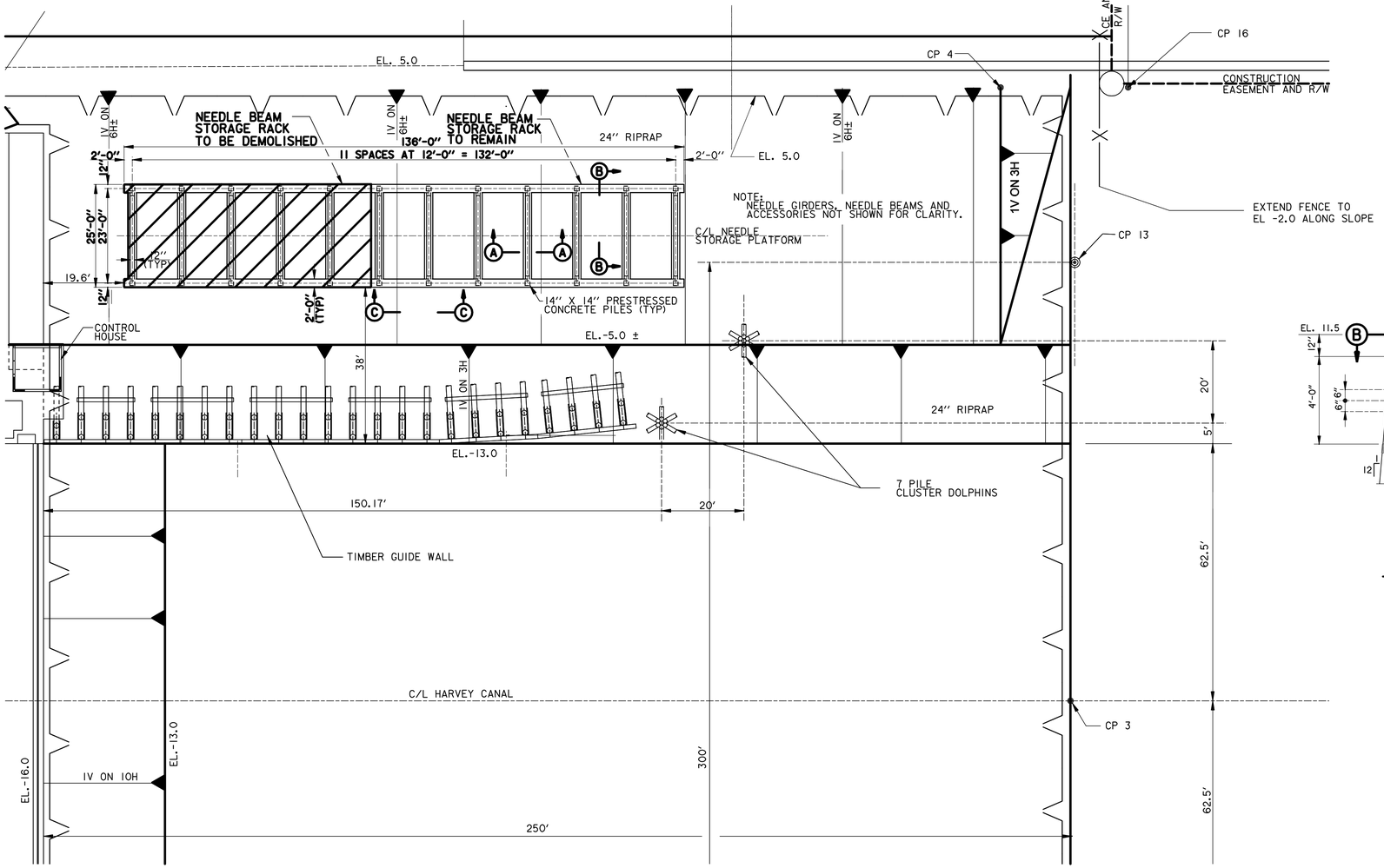

PLAN - STORAGE PLATFORM

NTS

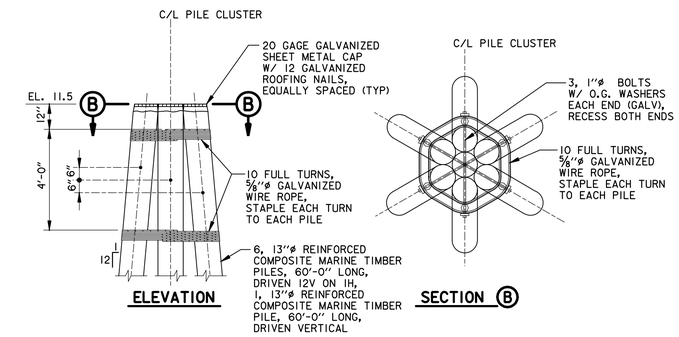

7 - PILE CLUSTER DOLPHIN DETAIL

NTS

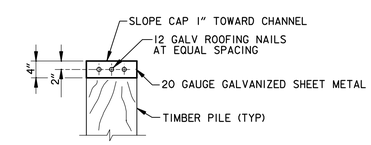

TYPICAL ALL TIMBER PILES

CAPPING DETAIL

NTS

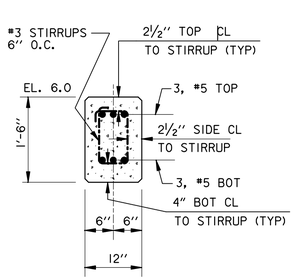

SECTION A

NTS

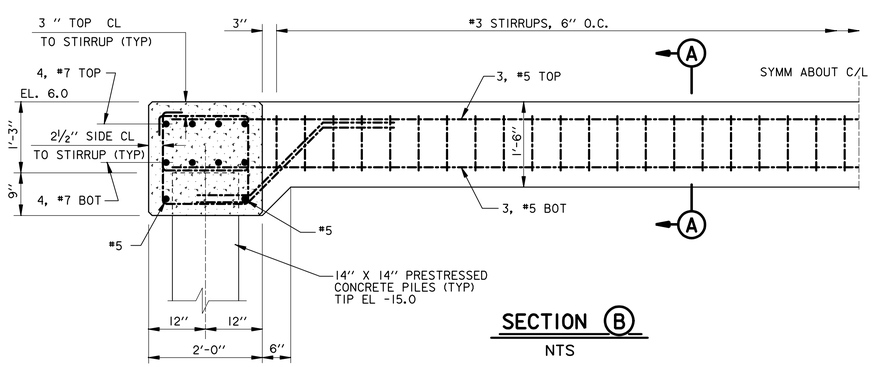

SECTION B

NTS

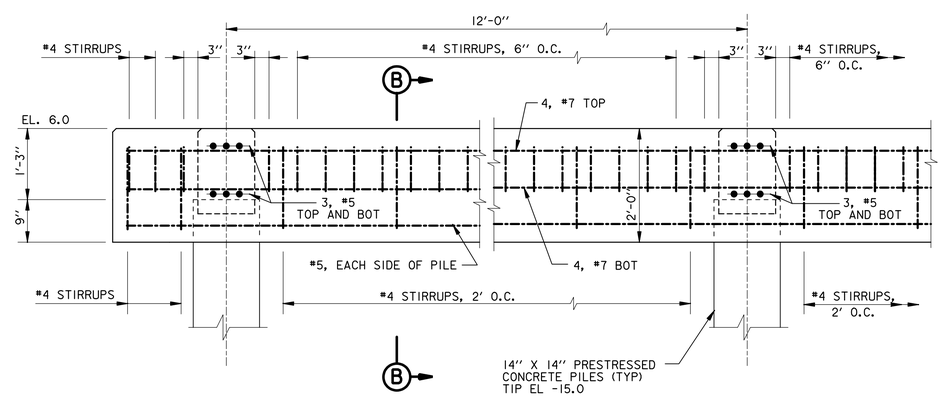

SECTION C

NTS

US Army Corps of Engineers®
NEW ORLEANS DISTRICT

MARK	DESCRIPTION	DATE	APPR.	MARK	DESCRIPTION	DATE	APPR.

U.S. ARMY CORPS OF ENGINEERS
NEW ORLEANS DISTRICT
NEW ORLEANS, LOUISIANA

DESIGNED BY:	DATE:
DWN BY:	CKD BY:
SUBMITTED BY:	SOLICITATION NO.:
	CONTRACT NO.:
PLOT SCALE:	PLOT DATE:
	FILE NUMBER:
SIZE:	FILE NAME:

WEST BANK AND VICINITY, NEW ORLEANS, LOUISIANA
HURRICANE PROTECTION PROJECT
WEST OF ALGIERS CANAL
HARVEY CANAL SECTOR GATE COMPLEX
JEFFERSON PARISH, LOUISIANA

NEEDLE DAM AND GIRDER STORAGE PLATFORM DEMO DETAILS

SHEET IDENTIFICATION
1-9 OF 1-18

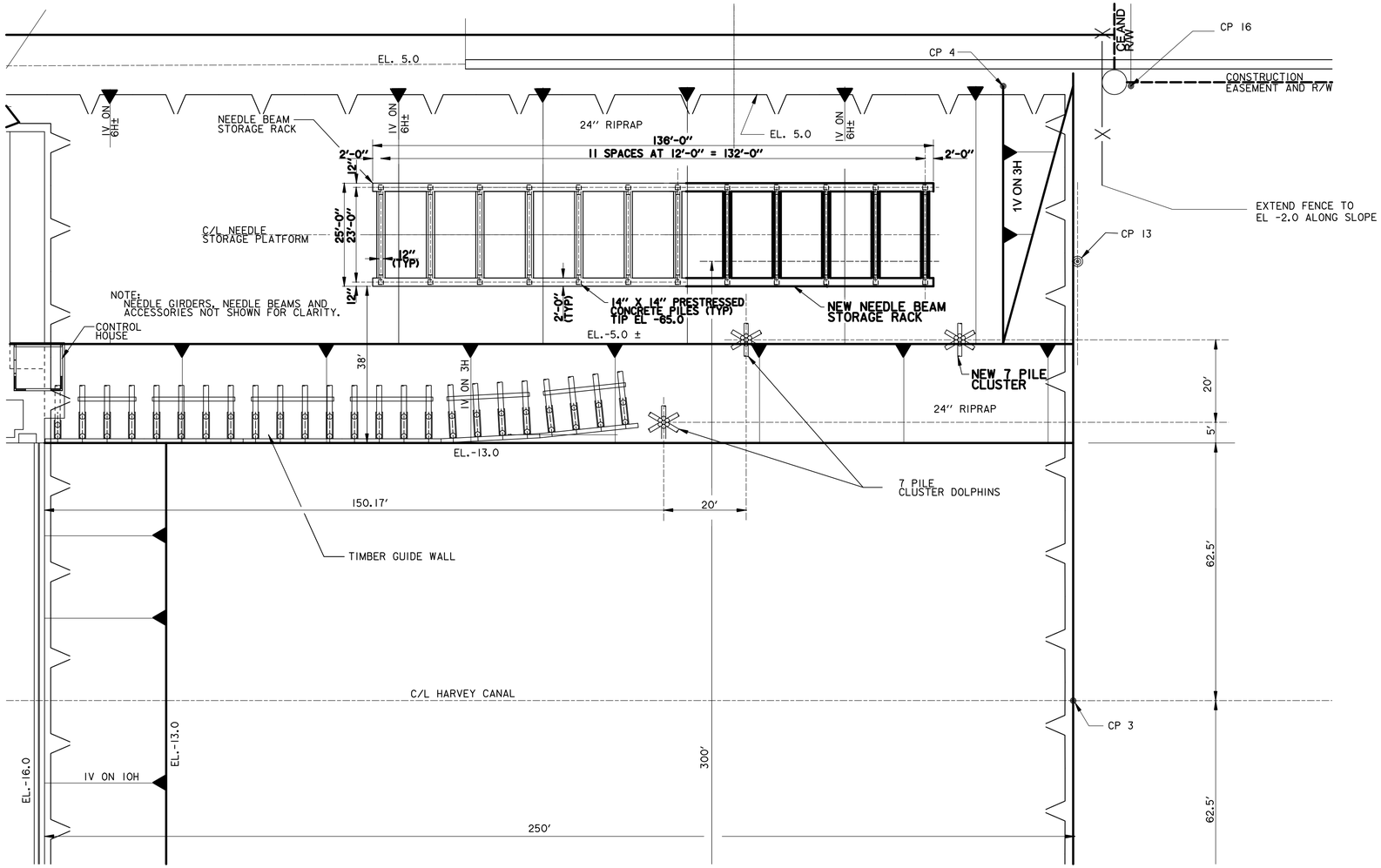

PLAN - STORAGE PLATFORM

NTS

US Army Corps of Engineers®
NEW ORLEANS DISTRICT

MARK	DESCRIPTION	DATE	APPR.	MARK	DESCRIPTION	DATE	APPR.

U.S. ARMY CORPS OF ENGINEERS
NEW ORLEANS DISTRICT
NEW ORLEANS, LOUISIANA

DESIGNED BY: | DATE:
DWN BY: | CKD BY: | SOLICITATION NO.:
SUBMITTED BY: | CONTRACT NO.:
PLOT SCALE | PLOT DATE: | FILE NUMBER:
SIZE: | FILE NAME:

WEST BANK AND VICINITY, NEW ORLEANS, LOUISIANA
HURRICANE PROTECTION PROJECT
WEST OF ALGIERS CANAL
HARVEY CANAL SECTOR GATE COMPLEX
JEFFERSON PARISH, LOUISIANA

NEEDLE DAM AND GIRDER STORAGE PLATFORM NEW ADDITION DETAILS

SHEET IDENTIFICATION
1-10 OF 1-18

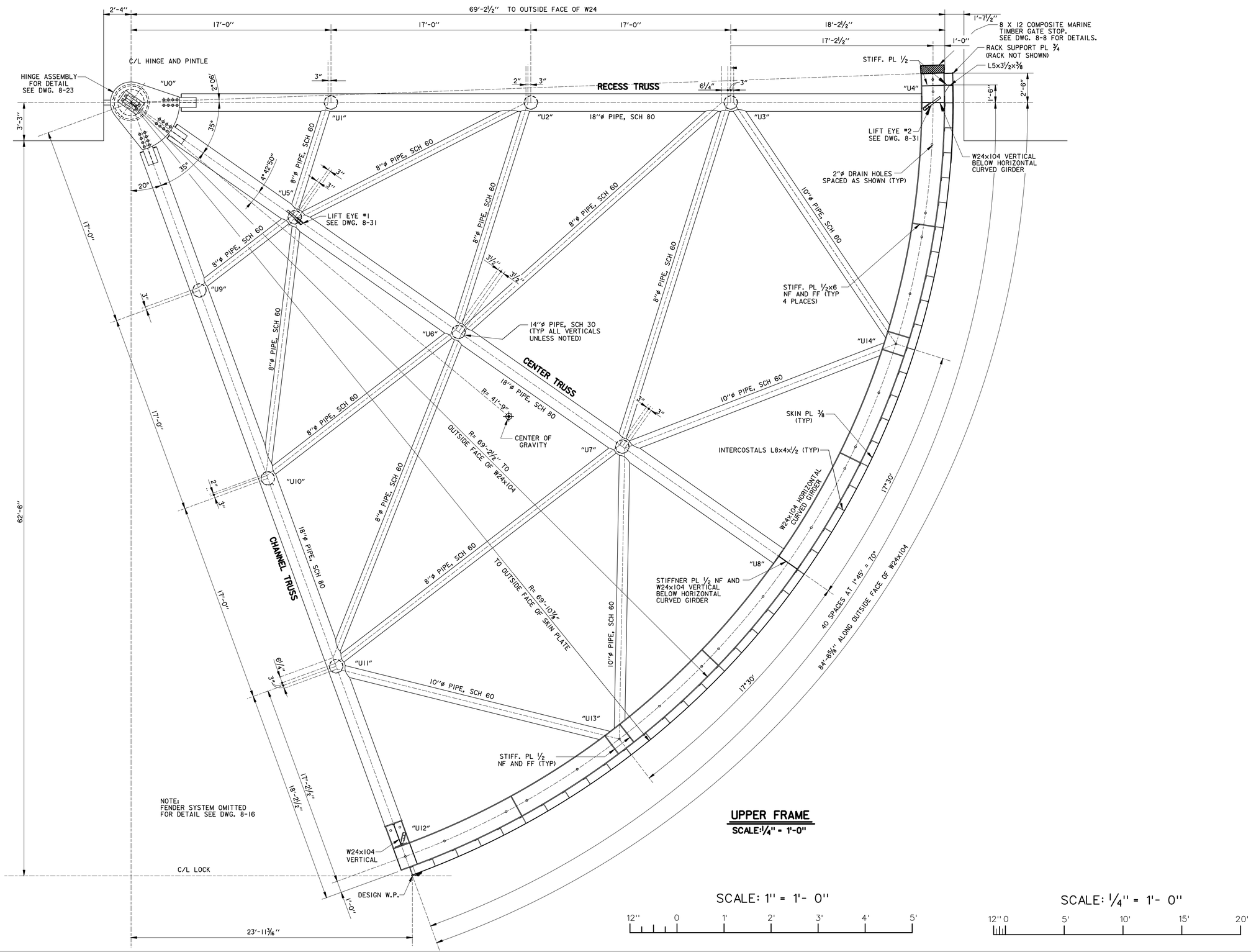

US Army Corps of Engineers®
NEW ORLEANS DISTRICT

MARK	DESCRIPTION	DATE	APPR.	MARK	DESCRIPTION	DATE	APPR.

U.S. ARMY CORPS OF ENGINEERS
NEW ORLEANS DISTRICT
NEW ORLEANS, LOUISIANA

DESIGNED BY: | DATE:
DWN BY: | CKD BY: | SOLICITATION NO.:
SUBMITTED BY: | CONTRACT NO.:
PLOT SCALE: | PLOT DATE: | FILE NUMBER:
SIZE: | FILE NAME:

SHEET IDENTIFICATION
1-11 OF 1-18

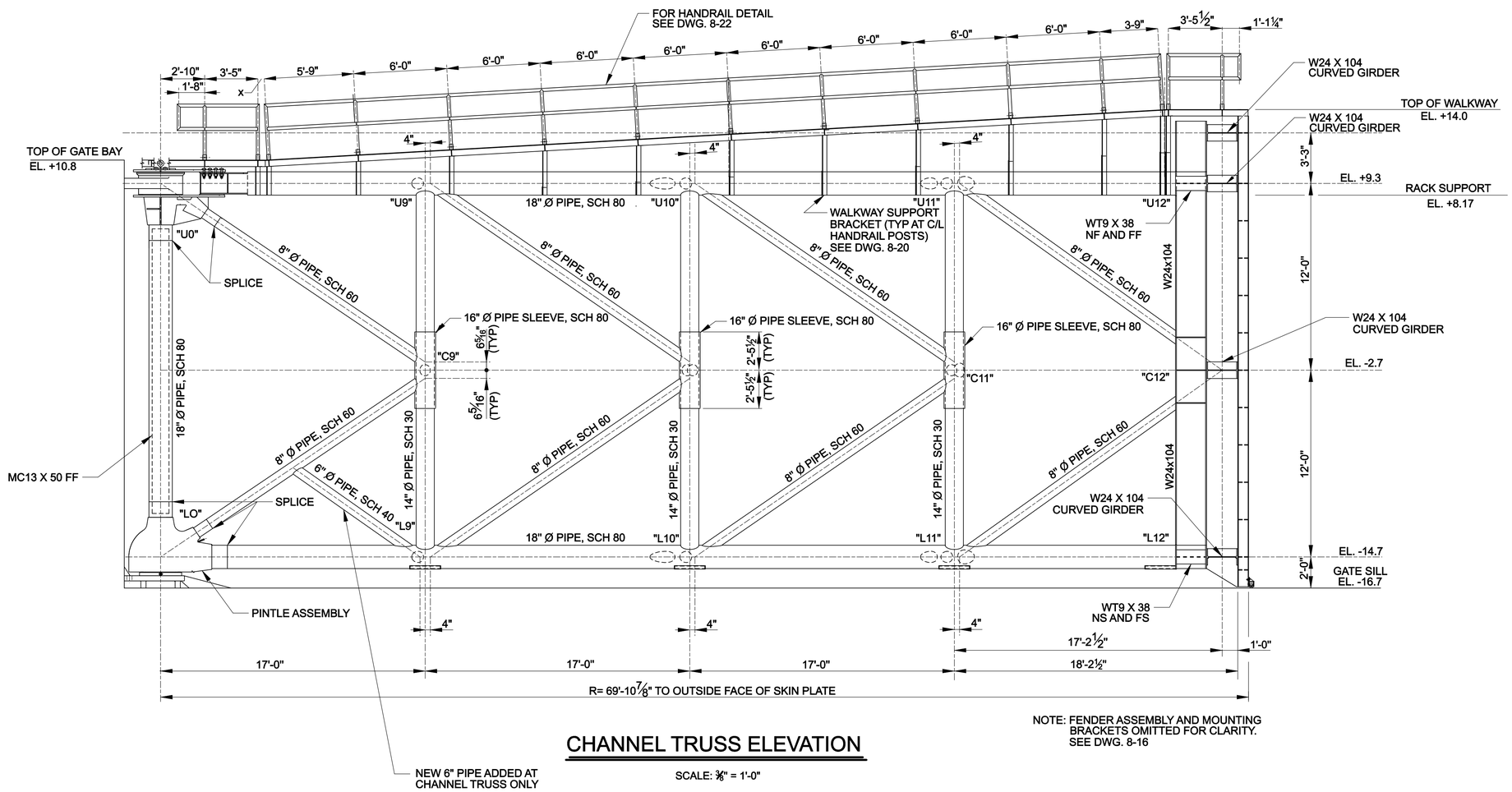

NOTE: FENDER ASSEMBLY AND MOUNTING BRACKETS OMITTED FOR CLARITY. SEE DWG. 8-16

CHANNEL TRUSS ELEVATION

SCALE: ⅜" = 1'-0"

SCALE:1-1/2"=1'

0 6" 1' 2'

US Army Corps of Engineers®
NEW ORLEANS DISTRICT

MARK	DESCRIPTION	DATE	APPR.

MARK	DESCRIPTION	DATE	APPR.

U.S. ARMY CORPS OF ENGINEERS
NEW ORLEANS DISTRICT
NEW ORLEANS, LOUISIANA

DESIGNED BY: Joe A. Designer
DWN BY: XXX
CKD BY: XXX
SUBMITTED BY: Bob A. Submitter
PLOT SCALE: XXXX:1
PLOT DATE: MM/DD/YYYY
SIZE: ANSI D
FILE NAME: XXXXXXXX.dgn
DATE: DD-MON-YYYY
SOLICITATION NO.: W912P8-##-X-#####
CONTRACT NO.: W912P8-##-X-#####
FILE NUMBER: H-##-#####

WEST BANK AND VICINITY, HURRICANE PROTECTION PROJECT
WBV - 46.2
HARVEY CANAL SECTOR GATE
PHASE II
JEFFERSON PARISH, LOUISIANA

STEEL SECTOR GATE CHANNEL TRUSS ELEVATION

SHEET IDENTIFICATION
1-12 OF 1-18

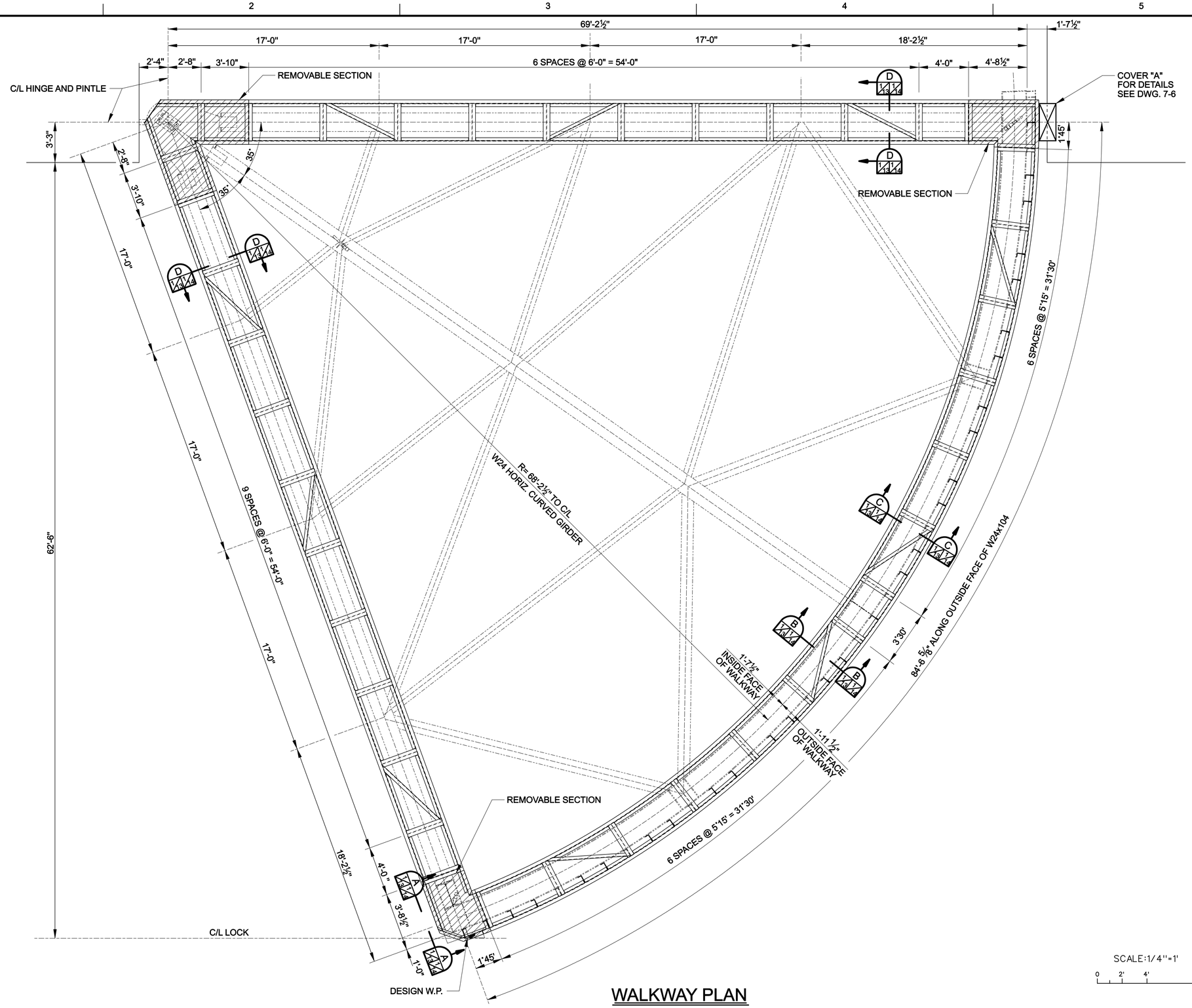

WALKWAY PLAN

SCALE: ⅜" = 1'-0"

US Army Corps of Engineers®
NEW ORLEANS DISTRICT

MARK	DESCRIPTION	DATE	APPR.

MARK	DESCRIPTION	DATE	APPR.

U.S. ARMY CORPS OF ENGINEERS
NEW ORLEANS DISTRICT
NEW ORLEANS, LOUISIANA

DESIGNED BY: Joe A. Designer
DWN BY: XXX
CKD BY: XXX
SUBMITTED BY: Bob A. Submitter
PLOT SCALE: XXXX:1
PLOT DATE: MM/DD/YYYY
SIZE: ANSI D
FILE NAME: XXXXXXXX.dgn
DATE: DD-MON-YYYY
SOLICITATION NO.: W912P8-##-X-#####
CONTRACT NO.: W912P8-##-X-#####
FILE NUMBER: H-##-#####

WEST BANK AND VICINITY, HURRICANE PROTECTION PROJECT
WBV - 46.2
HARVEY CANAL SECTOR GATE
PHASE II
JEFFERSON PARISH, LOUISIANA

STEEL SECTOR GATE WALKWAY PLAN

SHEET IDENTIFICATION
1-13 OF 1-18

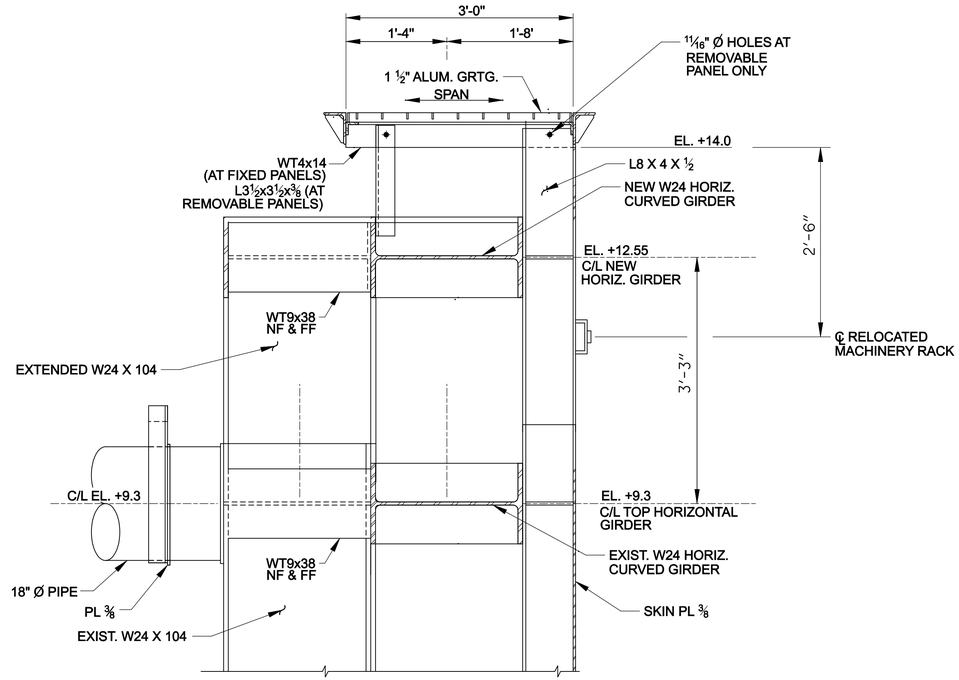

SECTION A (A 1/13 1/14)
SCALE: 1" = 1'-0"

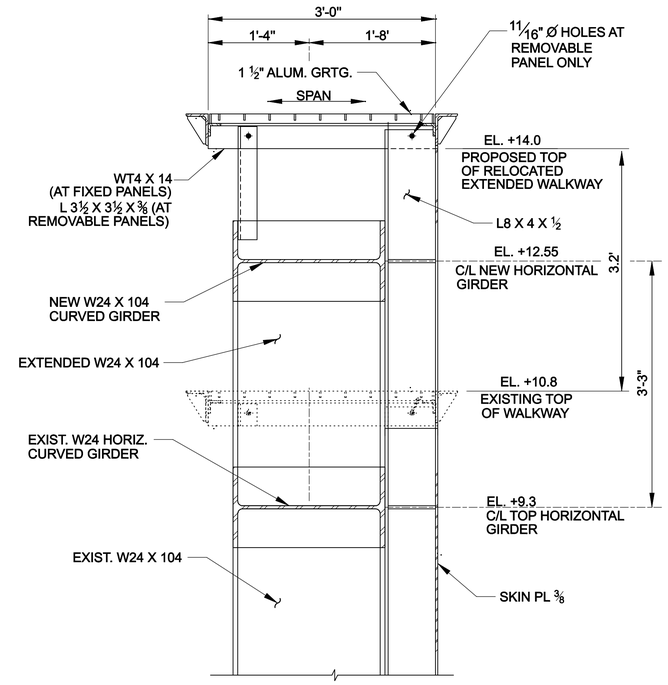

SECTION B (B 1/13 1/14)
SCALE: 1" = 1'-0"

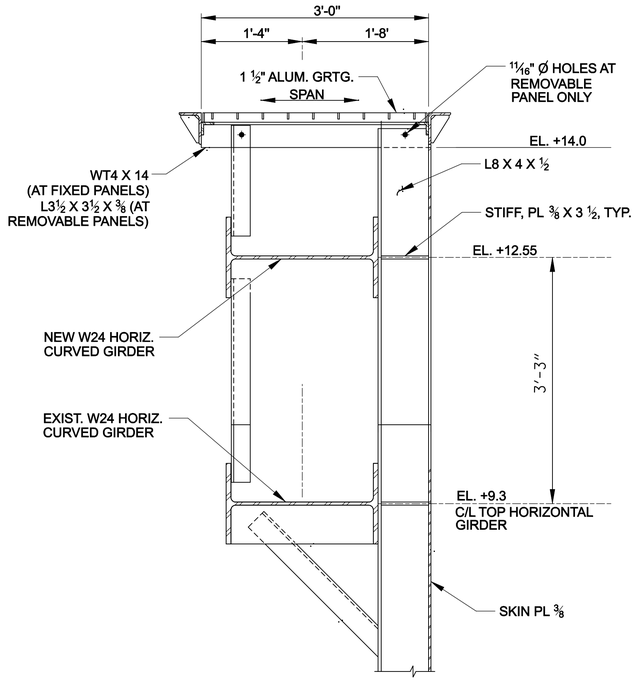

SECTION C (C 1/13 1/14)
SCALE: 1" = 1'-0"

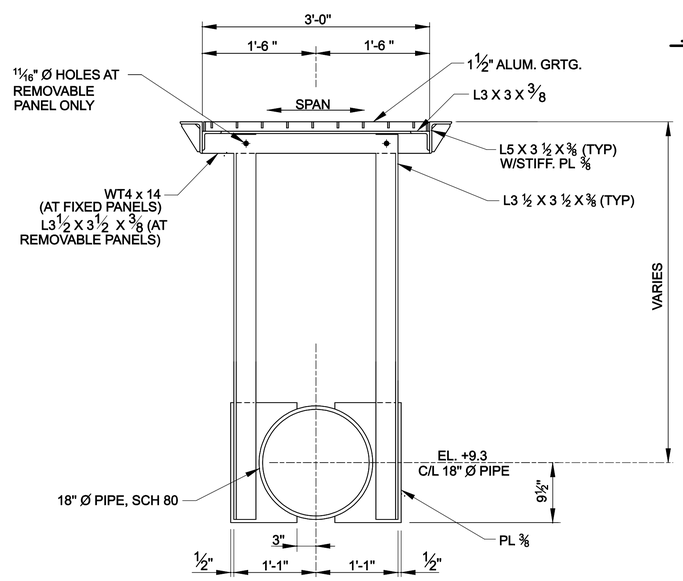

SECTION D (D 1/13 1/14)
SCALE: 1" = 1'-0"

SCALE: 1"=1'
0 1' 2'

US Army Corps of Engineers®
NEW ORLEANS DISTRICT

MARK	DESCRIPTION	DATE	APPR.

MARK	DESCRIPTION	DATE	APPR.

U.S. ARMY CORPS OF ENGINEERS
NEW ORLEANS DISTRICT
NEW ORLEANS, LOUISIANA

DESIGNED BY: Joe A. Designer
DWN BY: XXX
CKD BY: XXX
SUBMITTED BY: Bob A. Submitter
PLOT SCALE: XXXX:1
PLOT DATE: MM/DD/YYYY
SIZE: ANSI D
FILE NAME: XXXXXXXX.dgn
DATE: DD-MON-YYYY
SOLICITATION NO.: W912P8-##-X-####
CONTRACT NO.: W912P8-##-X-####
FILE NUMBER: H-##-#####

WEST BANK AND VICINITY, HURRICANE PROTECTION PROJECT
WBV - 46.2
HARVEY CANAL SECTOR GATE
PHASE II
JEFFERSON PARISH, LOUISIANA

STEEL PARAPET EXTENSION AND WALKWAY SECTIONS

SHEET IDENTIFICATION
1-14 OF 1-18

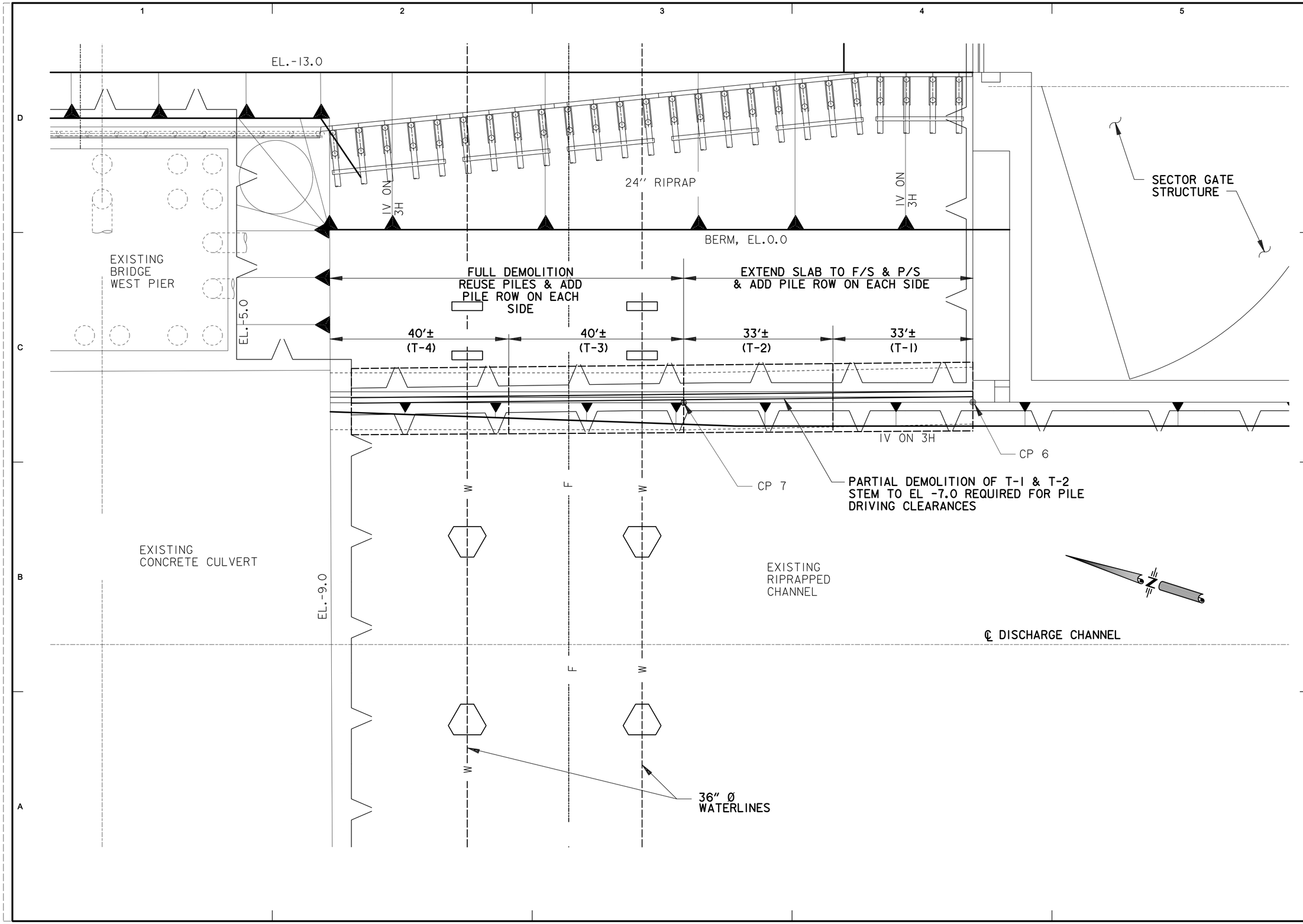

US ARMY CORPS OF ENGINEERS
NEW ORLEANS DISTRICT

MARK	DESCRIPTION	DATE	APPR.	MARK	DESCRIPTION	DATE	APPR.

U. S. ARMY ENGINEER DISTRICT
CORPS OF ENGINEERS

DESIGNED BY: | DATE:
DWN BY: | CKD BY: | SOLICITATION NO.:
SUBMITTED BY: | CONTRACT NO.:
FILE NAME: | FILE NUMBER:
SIZE: | PLOT SCALE: | PLOT DATE:

WEST BANK AND VICINITY, HURRICANE PROTECTION PROJECT
WBV - 46.2
HARVEY CANAL SECTOR GATE
PHASE II
JEFFERSON PARISH, LOUISIANA

T-WALLS T-1 TO T-4

SHEET IDENTIFICATION
1-15 OF 1-18

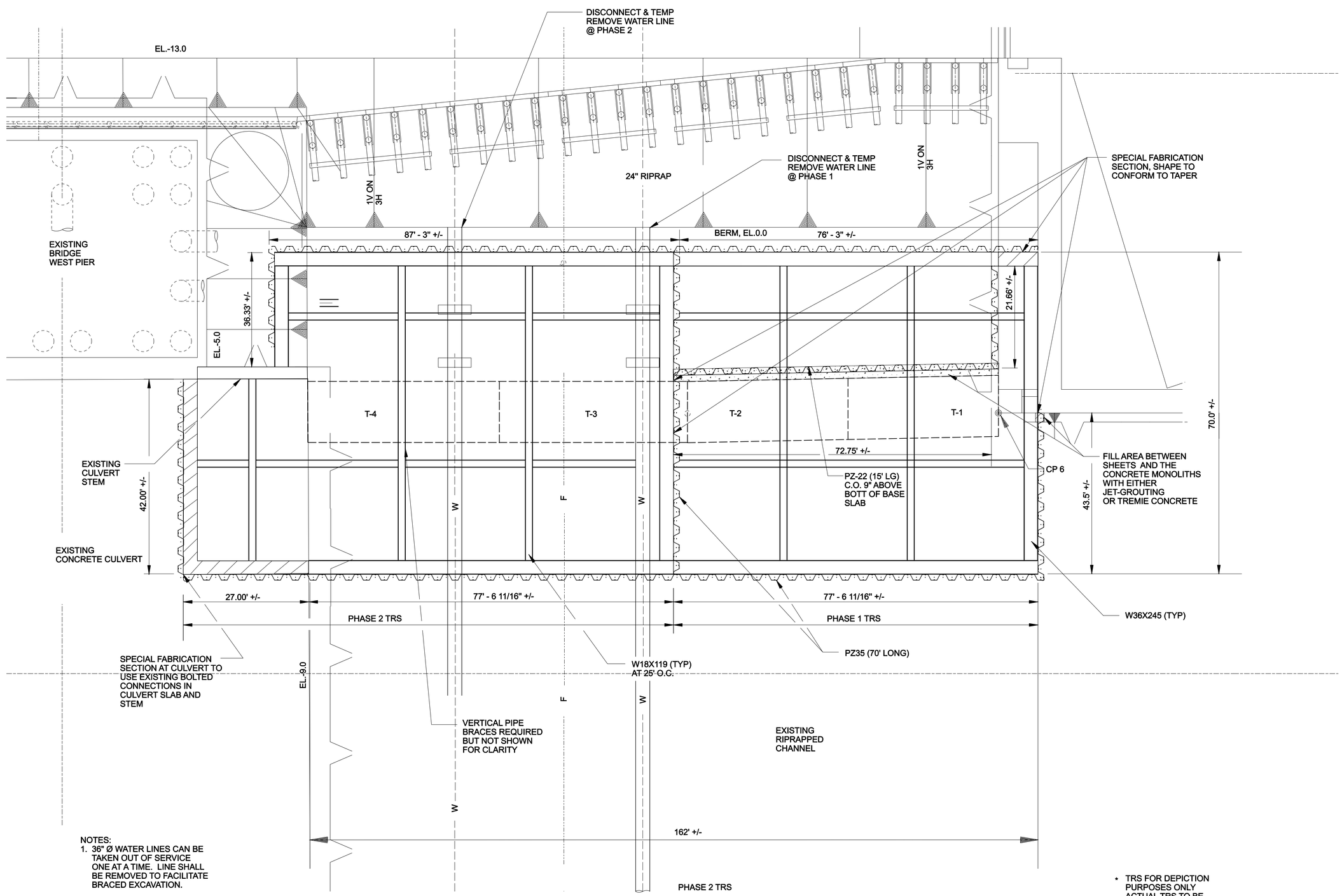

NOTES:

1. 36" Ø WATER LINES CAN BE TAKEN OUT OF SERVICE ONE AT A TIME. LINE SHALL BE REMOVED TO FACILITATE BRACED EXCAVATION.
2. TREMIE CONCRETE TO BE PLACED WITHIN ENTIRE EXCAVATION PRIOR TO REWATERING BETWEEN EL. -16.5 & EL. -18.5

* TRS FOR DEPICTION PURPOSES ONLY ACTUAL TRS TO BE CONTRACTOR DESIGNED.

US ARMY CORPS OF ENGINEERS
NEW ORLEANS DISTRICT

MARK	DESCRIPTION	DATE	APPR.	MARK	DESCRIPTION	DATE	APPR.

U. S. ARMY ENGINEER DISTRICT
CORPS OF ENGINEERS

DESIGNED BY: | DATE:
DWN BY: | CKD BY: | SOLICITATION NO.:
SUBMITTED BY: | CONTRACT NO.:
FILE NAME: | FILE NUMBER:
SIZE: | PLOT SCALE: | PLOT DATE:

WEST BANK AND VICINITY, NEW ORLEANS, LOUISIANA
HURRICANE PROTECTION PROJECT
WEST OF ALGIERS CANAL
HARVEY CANAL SECTOR GATE COMPLEX
JEFFERSON PARISH, LOUISIANA

TRS FOR T-WALLS
T-1 TO T-4

SHEET IDENTIFICATION
1-16 OF 1-18

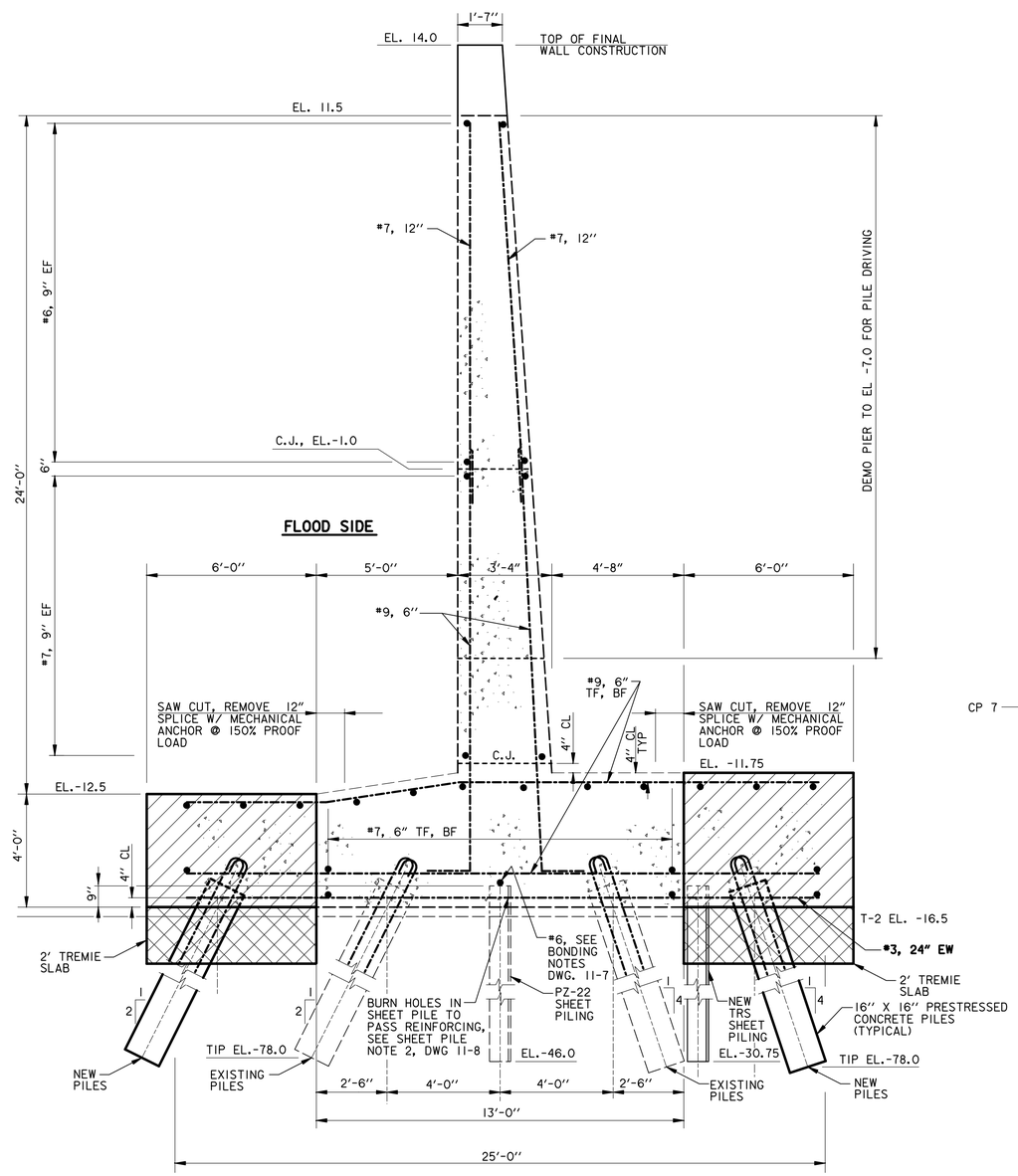

SECTION (A)

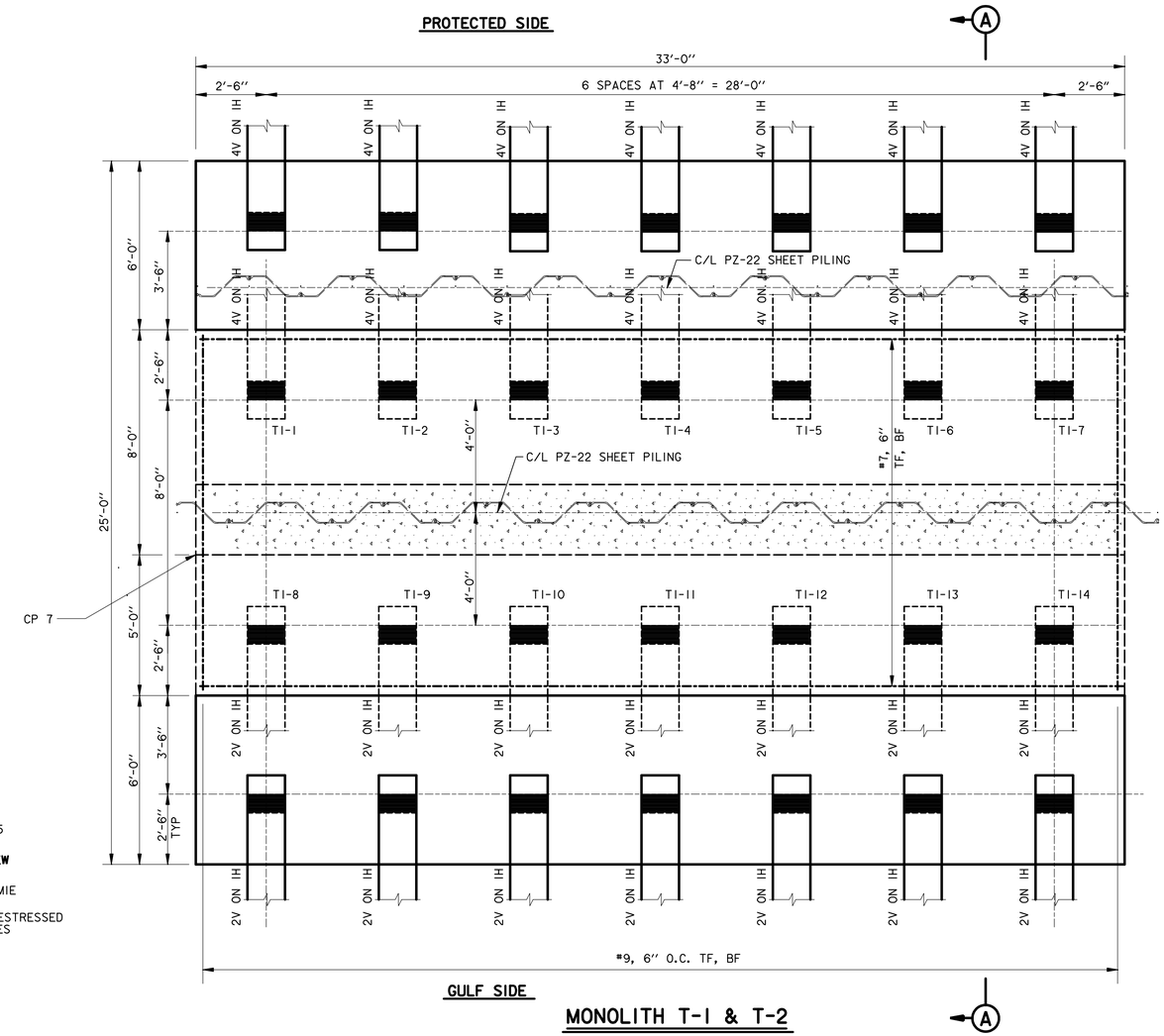

= NEW MONOLITH EXTENSION TO BE ADDED TO EXISTING SLAB

US Army Corps of Engineers®
NEW ORLEANS DISTRICT

MARK	DESCRIPTION	DATE	APPR.

MARK	DESCRIPTION	DATE	APPR.

U.S. ARMY CORPS OF ENGINEERS
NEW ORLEANS DISTRICT
NEW ORLEANS, LOUISIANA

DESIGNED BY:		DATE:	
DWN BY:	CKD BY:	SOLICITATION NO.:	
SUBMITTED BY:		CONTRACT NO.:	
PLOT SCALE:	PLOT DATE:	FILE NUMBER:	
SIZE:	FILE NAME:		

WEST BANK AND VICINITY, HURRICANE PROTECTION PROJECT
WBV - 46.2
HARVEY CANAL SECTOR GATE
PHASE II
JEFFERSON PARISH, LOUISIANA

T-WALL SECTIONS
T-1 & T-2

SHEET IDENTIFICATION
1-17 OF 1-18

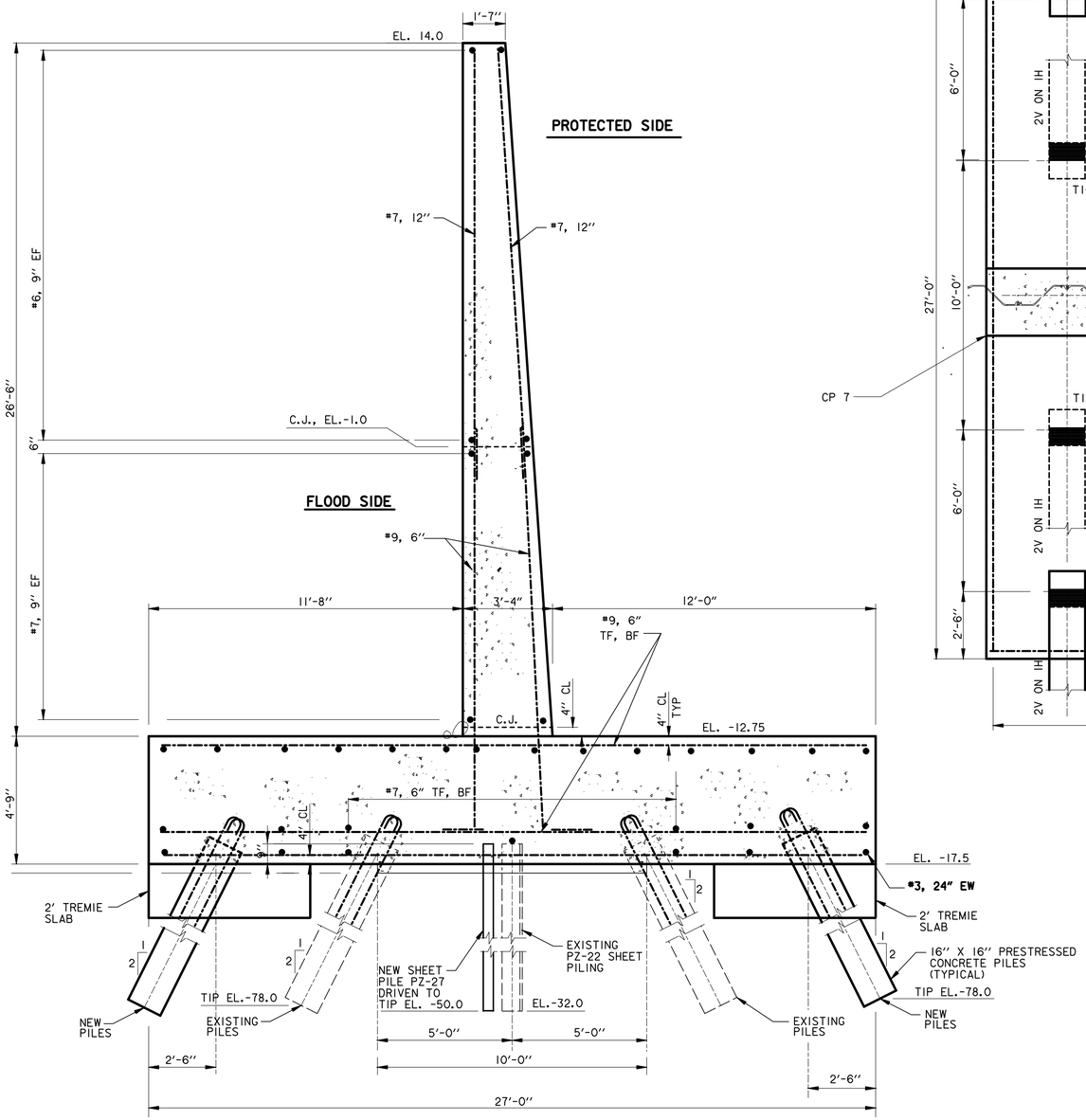

SECTION B

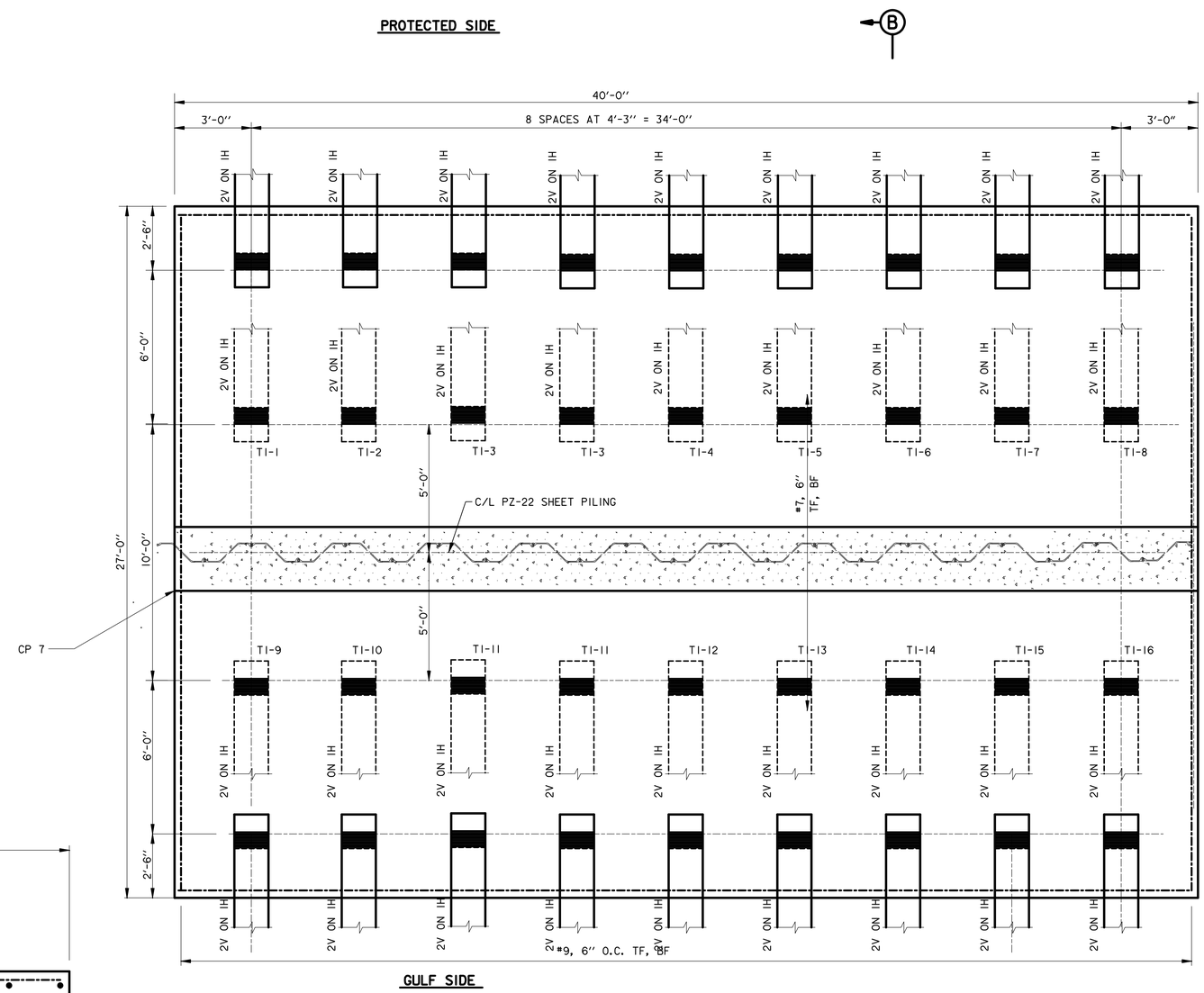

MONOLITH T-3 & T-4

B

US Army Corps of Engineers®
NEW ORLEANS DISTRICT

MARK	DESCRIPTION	DATE	APPR.

MARK	DESCRIPTION	DATE	APPR.

U.S. ARMY CORPS OF ENGINEERS
NEW ORLEANS DISTRICT
NEW ORLEANS, LOUISIANA

DESIGNED BY:		DATE:	
DWN BY:	CKD BY:	SOLICITATION NO.:	
SUBMITTED BY:		CONTRACT NO.:	
PLOT SCALE:	PLOT DATE:	FILE NUMBER:	
SIZE:	FILE NAME:		

WEST BANK AND VICINITY, HURRICANE PROTECTION PROJECT
WBV - 46.2
HARVEY CANAL SECTOR GATE
PHASE II
JEFFERSON PARISH, LOUISIANA

T-WALL SECTIONS
T-3 & T-4

SHEET IDENTIFICATION
1-18 OF 1-18

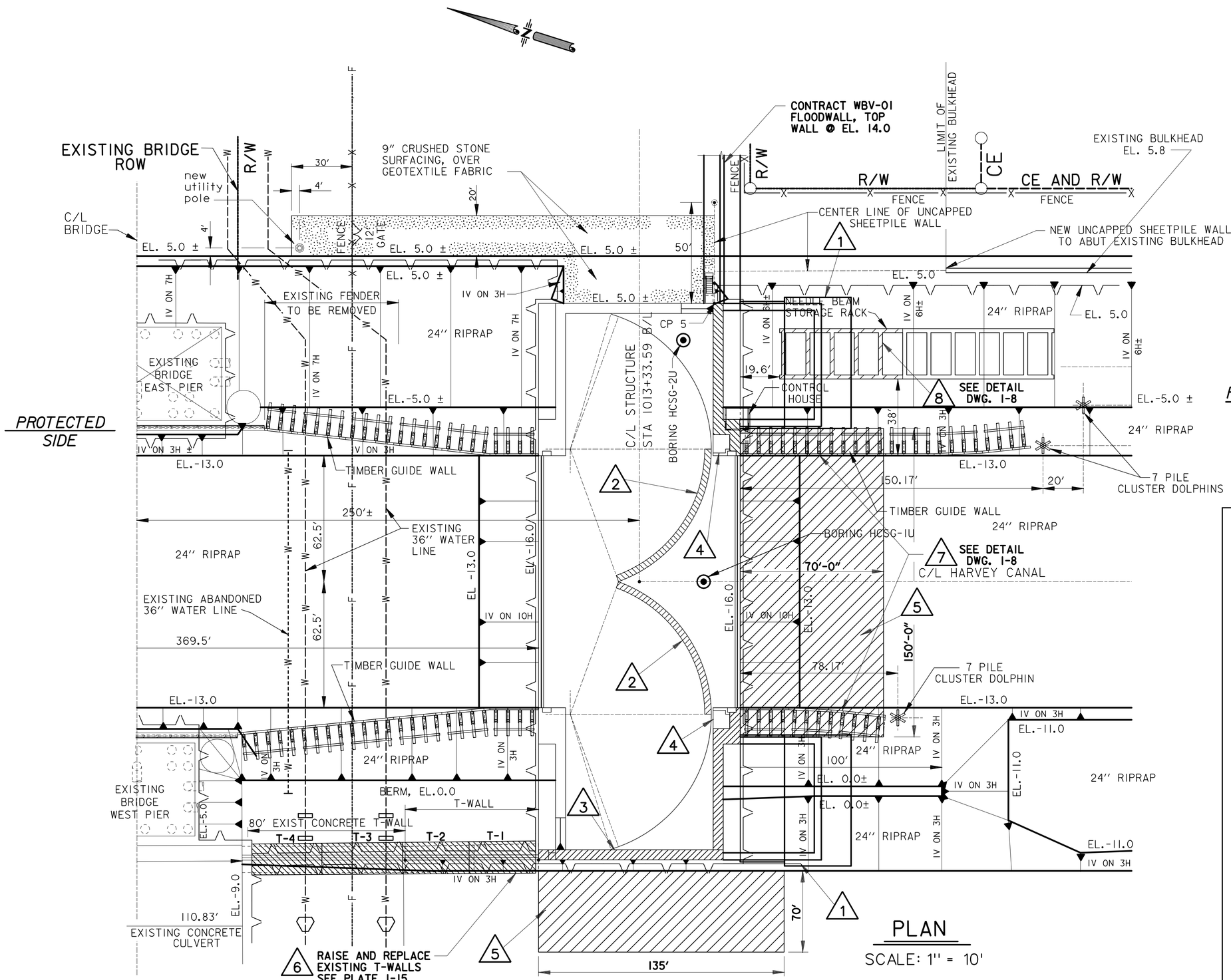

PLAN

SCALE: 1" = 10'

ALTERNATIVE 2A

RAISE STEEL SECTOR GATE AND WEST T-WALLS AND ADD FRONTING T-WALLS

1. ADD FRONTING T-WALLS AND U-FRAME TO EL. 14.0
2. RAISE STEEL SECTOR GATE SKIN PLATE AND WALKWAY TO EL. 14.0
3. ADD PARAPET CONCRETE WALL WITH BUTTRESSES TO EL. 14.0
4. RAISE GATE MACHINERY & ELECTRICAL BOXES IN CONTROL HOUSE
5. ADD SOIL MIXING
6. RAISE/REPLACE EXISTING T-WALLS
7. REMOVE & REPLACE GUIDEWALL
8. PARTIAL DEMOLITION OF STORAGE RACK

US Army Corps of Engineers®
NEW ORLEANS DISTRICT

MARK	DESCRIPTION	DATE	APPR.

MARK	DESCRIPTION	DATE	APPR.

U.S. ARMY CORPS OF ENGINEERS
NEW ORLEANS DISTRICT
NEW ORLEANS, LOUISIANA

DESIGNED BY: Joe A. Designer
DWN BY: XXX
CKD BY: XXX
SUBMITTED BY: Bob A. Submitter
PLOT SCALE: XXXX:1
PLOT DATE: MM/DD/YYYY
SIZE: ANSI D
FILE NAME: 45376-ALT2-DATE07-2007.dgn
DATE: DD-MON-YYYY
SOLICITATION NO.: W912P8-##-X-####
CONTRACT NO.: W912P8-##-X-####
FILE NUMBER: H-##-#####

WEST BANK AND VICINITY, HURRICANE PROTECTION PROJECT
WBV - 46.2
HARVEY CANAL SECTOR GATE
PHASE II
JEFFERSON PARISH, LOUISIANA

ALTERNATIVE 2A
SITE PLAN

SHEET IDENTIFICATION
2-1 OF 2-11

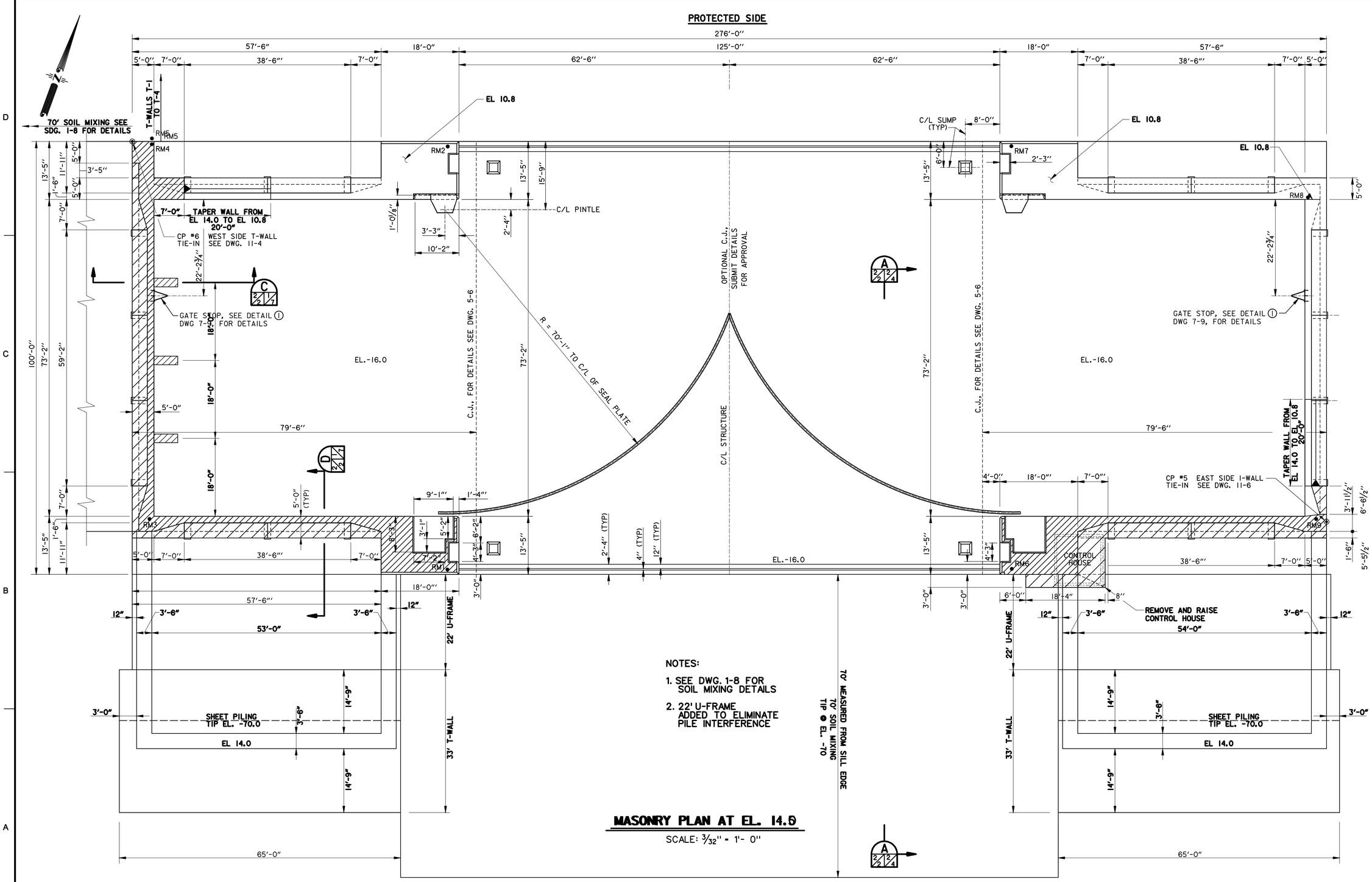

MASONRY PLAN AT EL. 14.0

SCALE: 3/32" = 1'- 0"

US Army Corps of Engineers®
NEW ORLEANS DISTRICT

MARK	DESCRIPTION	DATE	APPR.

MARK	DESCRIPTION	DATE	APPR.

U.S. ARMY CORPS OF ENGINEERS
NEW ORLEANS DISTRICT
NEW ORLEANS, LOUISIANA

DESIGNED BY: Joe A. Designer
DWN BY: XXX
CKD BY: XXX
SUBMITTED BY: Bob A. Submitter
PLOT SCALE: XXXX:1
PLOT DATE: MM/DD/YYYY
SIZE: ANSI D
FILE NAME: XXXXXXXX.dgn
DATE: DD-MON-YYYY
SOLICITATION NO.: W912P8-##-X-####
CONTRACT NO.: W912P8-##-X-####
FILE NUMBER: H-##-#####

WEST BANK AND VICINITY, HURRICANE PROTECTION PROJECT
WBV - 46.2
HARVEY CANAL SECTOR GATE
PHASE II
JEFFERSON PARISH, LOUISIANA

GATE MONOLITH - ALT. 2A MASONRY PLAN

SHEET IDENTIFICATION
2-2 OF 2-11

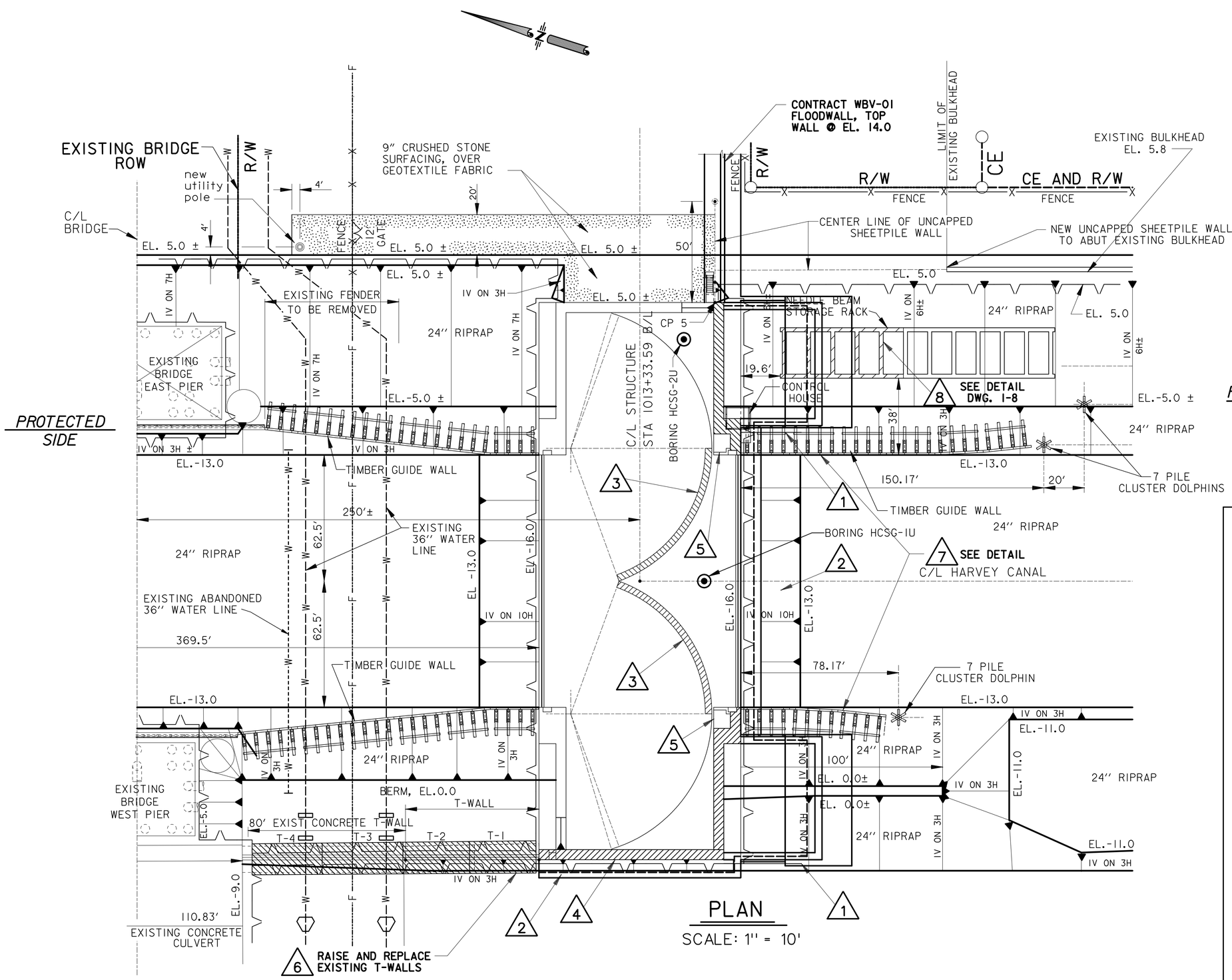

PLAN

SCALE: 1" = 10'

ALTERNATIVE 2

RAISE STEEL SECTOR GATE AND WEST MONOLITH WALLS AND ADD FRONTING T-WALLS

1. ADD FRONTING T-WALLS AND U-FRAME TO EL. 14.0
2. ADD SHEET PILING WALL & CAP
3. RAISE STEEL SECTOR GATE SKIN PLATE AND WALKWAY TO EL. 14.0
4. ADD PARAPET CONCRETE WALL WITH BUTTRESSES TO EL. 14.0
5. RAISE GATE MACHINERY & ELECTRICAL BOXES IN CONTROL HOUSE
6. RAISE/REPLACE EXISTING T-WALLS
7. REMOVE & REPLACE GUIDEWALL IN-KIND
8. PARTIAL DEMOLITION OF STORAGE RACK

US Army Corps of Engineers®
NEW ORLEANS DISTRICT

MARK	DESCRIPTION	DATE	APPR.

MARK	DESCRIPTION	DATE	APPR.

U.S. ARMY CORPS OF ENGINEERS
NEW ORLEANS DISTRICT
NEW ORLEANS, LOUISIANA

DESIGNED BY: Joe A. Designer
DWN BY: XXX
CKD BY: XXX
SUBMITTED BY: Bob A. Submitter
PLOT SCALE: XXXX:1
PLOT DATE: MM/DD/YYYY
SIZE: ANSI D
FILE NAME: 45376-ALT2-DATE07-2007.dgn
DATE: DD-MON-YYYY
SOLICITATION NO.: W912P8-##-X-####
CONTRACT NO.: W912P8-##-X-####
FILE NUMBER: H-##-#####

WEST BANK AND VICINITY, HURRICANE PROTECTION PROJECT
WBV - 46.2
HARVEY CANAL SECTOR GATE
PHASE II
JEFFERSON PARISH, LOUISIANA

ALTERNATIVE 2B
SITE PLAN

SHEET IDENTIFICATION
2-3 OF 2-11

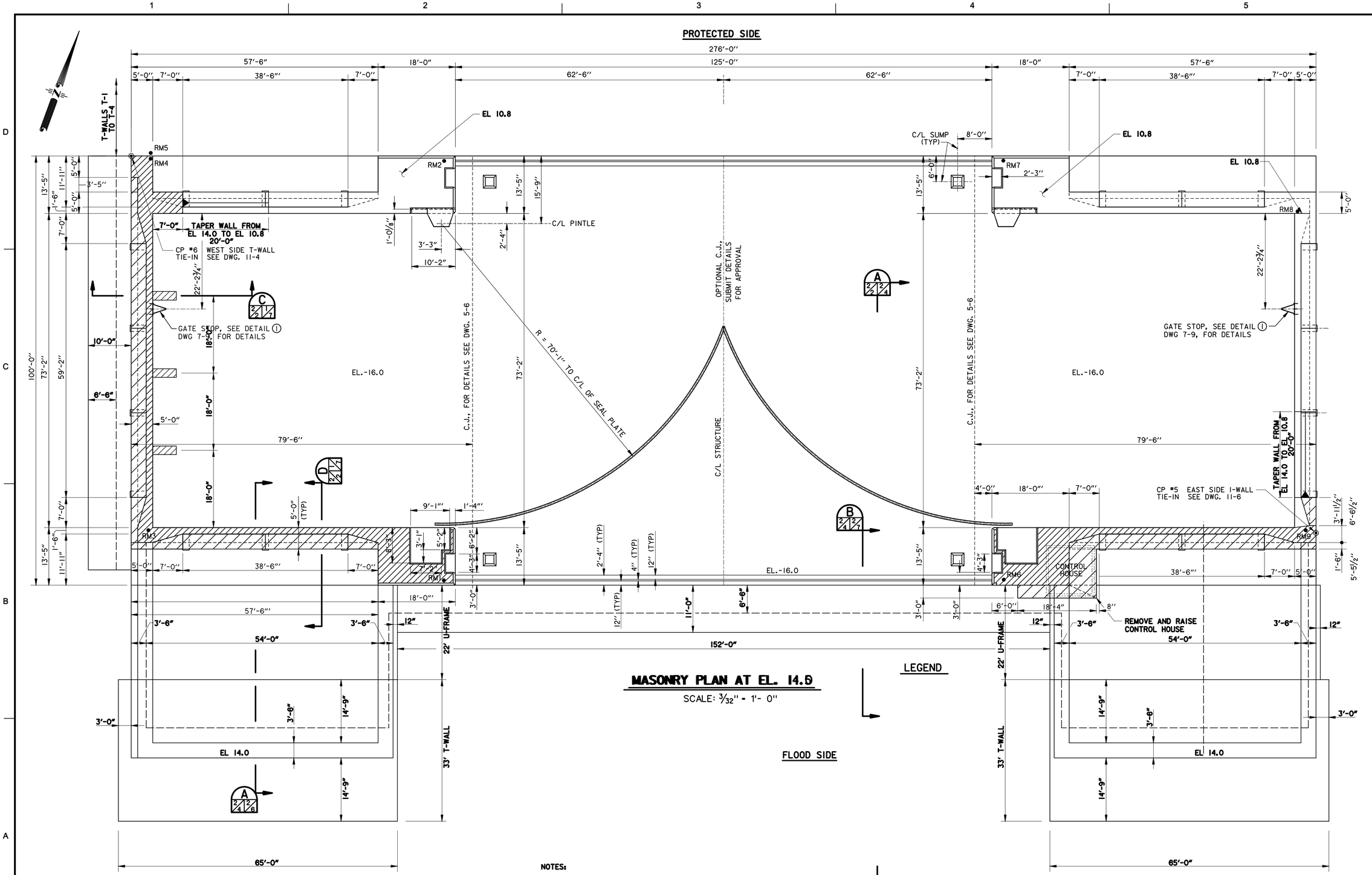

MASONRY PLAN AT EL. 14.0

SCALE: 3/32" = 1'- 0"

NOTES:

1. CONCRETE NOTES, SEE DWG. 1-4.
2. PILE FOUNDATION AND SHEET PILING CUT-OFF WALL, SEE DWG. 4-1.

US Army Corps of Engineers®
NEW ORLEANS DISTRICT

MARK	DESCRIPTION	DATE	APPR.

MARK	DESCRIPTION	DATE	APPR.

U.S. ARMY CORPS OF ENGINEERS
NEW ORLEANS DISTRICT
NEW ORLEANS, LOUISIANA

DESIGNED BY: Joe A. Designer
DWN BY: XXX
CKD BY: XXX
SUBMITTED BY: Bob A. Submitter
PLOT SCALE: XXXX:1
PLOT DATE: MM/DD/YYYY
SIZE: ANSI D
FILE NAME: XXXXXXXX.dgn
DATE: DD-MON-YYYY
SOLICITATION NO.: W912P8-##-X-####
CONTRACT NO.: W912P8-##-X-####
FILE NUMBER: H-##-#####

WEST BANK AND VICINITY, HURRICANE PROTECTION PROJECT
WBV - 46.2
HARVEY CANAL SECTOR GATE
PHASE II
JEFFERSON PARISH, LOUISIANA

GATE MONOLITH - ALT. 2B MASONRY PLAN

SHEET IDENTIFICATION
2-4 OF 2-11

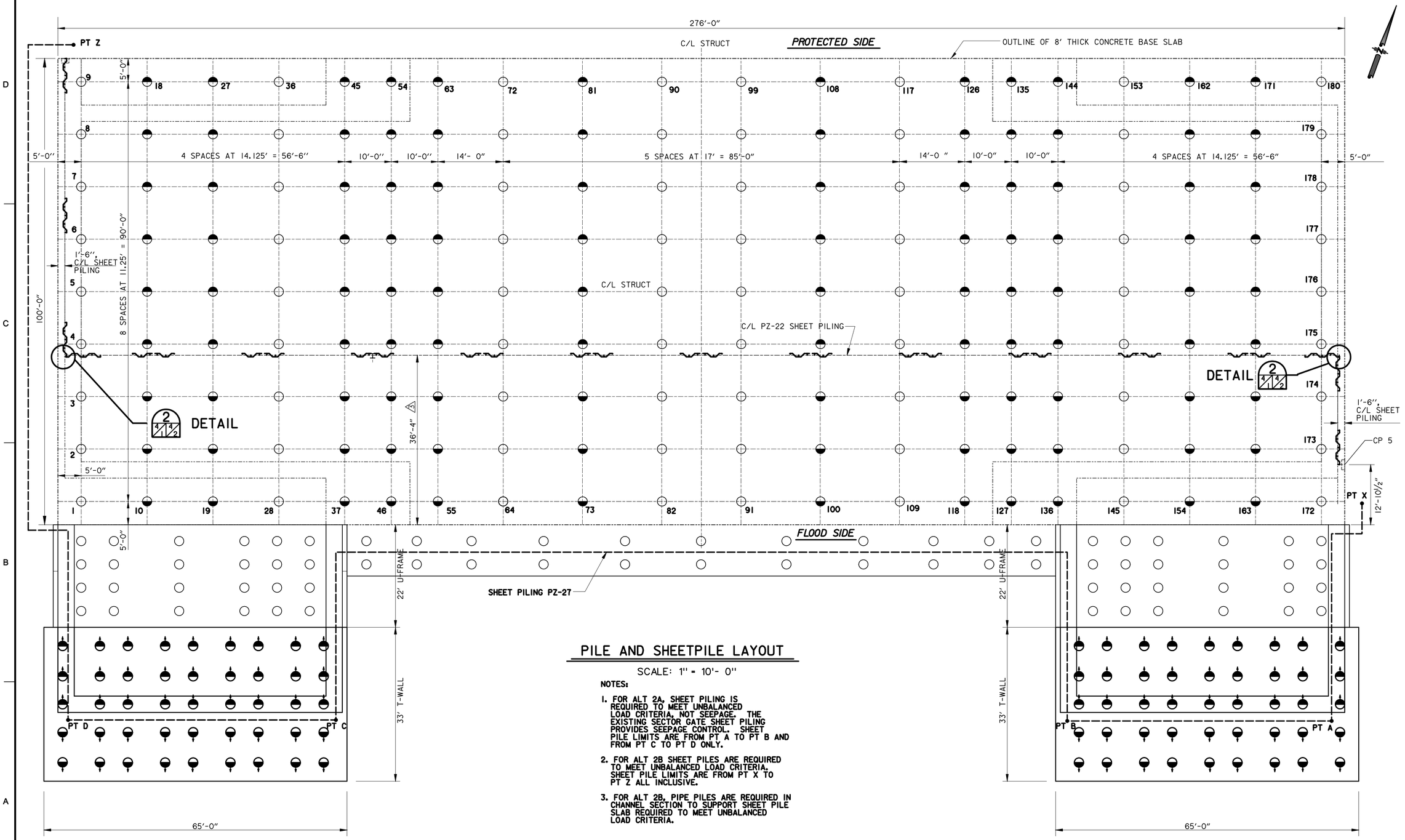

PILE AND SHEETPILE LAYOUT

SCALE: 1" = 10'- 0"

NOTES:

1. FOR ALT 2A, SHEET PILING IS REQUIRED TO MEET UNBALANCED LOAD CRITERIA, NOT SEEPAGE. THE EXISTING SECTOR GATE SHEET PILING PROVIDES SEEPAGE CONTROL. SHEET PILE LIMITS ARE FROM PT A TO PT B AND FROM PT C TO PT D ONLY.
2. FOR ALT 2B SHEET PILES ARE REQUIRED TO MEET UNBALANCED LOAD CRITERIA. SHEET PILE LIMITS ARE FROM PT X TO PT Z ALL INCLUSIVE.
3. FOR ALT 2B, PIPE PILES ARE REQUIRED IN CHANNEL SECTION TO SUPPORT SHEET PILE SLAB REQUIRED TO MEET UNBALANCED LOAD CRITERIA.

US Army Corps of Engineers®
NEW ORLEANS DISTRICT

MARK	DESCRIPTION	DATE	APPR.

MARK	DESCRIPTION	DATE	APPR.

U.S. ARMY CORPS OF ENGINEERS
NEW ORLEANS DISTRICT
NEW ORLEANS, LOUISIANA

DESIGNED BY: Joe A. Designer
DWN BY: XXX
CKD BY: XXX
SUBMITTED BY: Bob A. Submitter
PLOT SCALE: XXXX:1
PLOT DATE: MM/DD/YYYY
SIZE: ANSI D
FILE NAME: XXXXXXXX.dgn
DATE: DD-MON-YYYY
SOLICITATION NO.: W912P8-##-X-####
CONTRACT NO.: W912P8-##-X-####
FILE NUMBER: H-##-#####

WEST BANK AND VICINITY, HURRICANE PROTECTION PROJECT
WBV - 46.2
HARVEY CANAL SECTOR GATE
PHASE II
JEFFERSON PARISH, LOUISIANA

SECTOR GATE, U-FRAME AND T-WALL PILE LAYOUT

SHEET IDENTIFICATION
2-5 OF 2-11

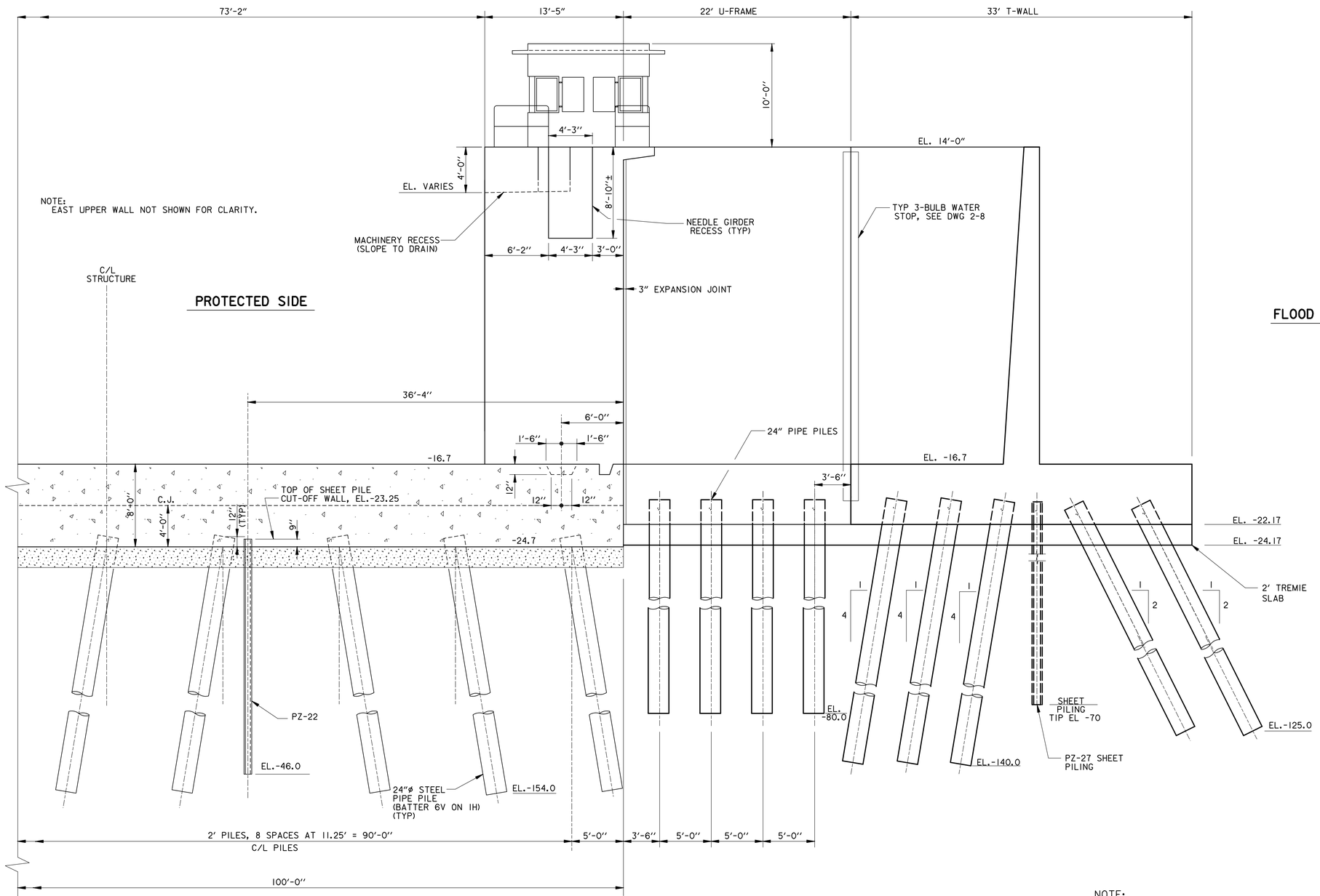

NOTE:

U-FRAME SPACE NOTE BEAR
ON EXISTING SECTOR GATE

SECTION A 2/4 2/6

SCALE: 3/16" = 1'- 0"

12" 0 5' 10' 15' 20'

US Army Corps of Engineers®
NEW ORLEANS DISTRICT

MARK	DESCRIPTION	DATE	APPR.

MARK	DESCRIPTION	DATE	APPR.

U.S. ARMY CORPS OF ENGINEERS
NEW ORLEANS DISTRICT
NEW ORLEANS, LOUISIANA

DESIGNED BY: Joe A. Designer
DWN BY: XXX
CKD BY: XXX
SUBMITTED BY: Bob A. Submitter
PLOT SCALE: XX=XX:1
PLOT DATE: MMM-DD-YYYY
SIZE: ANSI D
FILE NAME: XXXXXXXX.dgn
DATE: DD-MON-YYYY
SOLICITATION NO.: W912PB-##-X-####
CONTRACT NO.: W912PB-##-X-####
FILE NUMBER: ##-##-####

WEST BANK AND VICINITY, HURRICANE PROTECTION PROJECT
WBV - 46.2
HARVEY CANAL SECTOR GATE
PHASE II
JEFFERSON PARISH, LOUISIANA

GATE U-FRAME AND T-WALL SECTION

SHEET IDENTIFICATION
2-6 OF 2-11

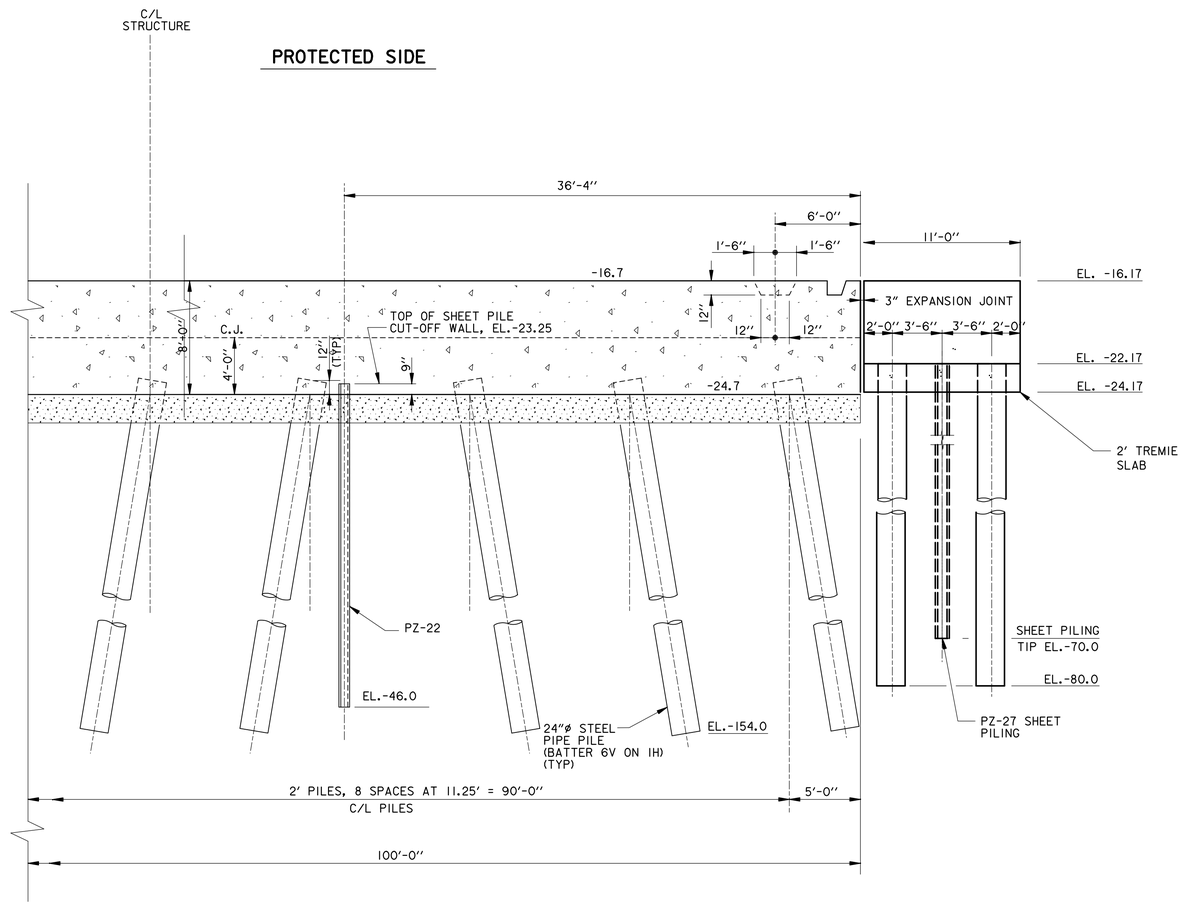

SECTION B 2/4 2/6

SCALE: 3/16" = 1'- 0"

12" 0 5' 10' 15' 20'

US Army Corps of Engineers®
NEW ORLEANS DISTRICT

MARK	DESCRIPTION	DATE	APPR.

MARK	DESCRIPTION	DATE	APPR.

U.S. ARMY CORPS OF ENGINEERS
NEW ORLEANS DISTRICT
NEW ORLEANS, LOUISIANA

DESIGNED BY: Joe A. Designer
DWN BY: XXX
CKD BY: XXX
SUBMITTED BY: Bob A. Submitter
PLOT SCALE: XXXX:1
PLOT DATE: MM/DD/YYYY
SIZE: ANSI D
FILE NAME: XXXXXXXX.dgn
DATE: DD-MON-YYYY
SOLICITATION NO.: W912P8-##-X-####
CONTRACT NO.: W912P8-##-X-####
FILE NUMBER: H-##-#####

WEST BANK AND VICINITY, HURRICANE PROTECTION PROJECT
WBV - 46.2
HARVEY CANAL SECTOR GATE
PHASE II
JEFFERSON PARISH, LOUISIANA

SLAB EXTENSION SECTION ALT. 2B

SHEET IDENTIFICATION
2-7 OF 2-11

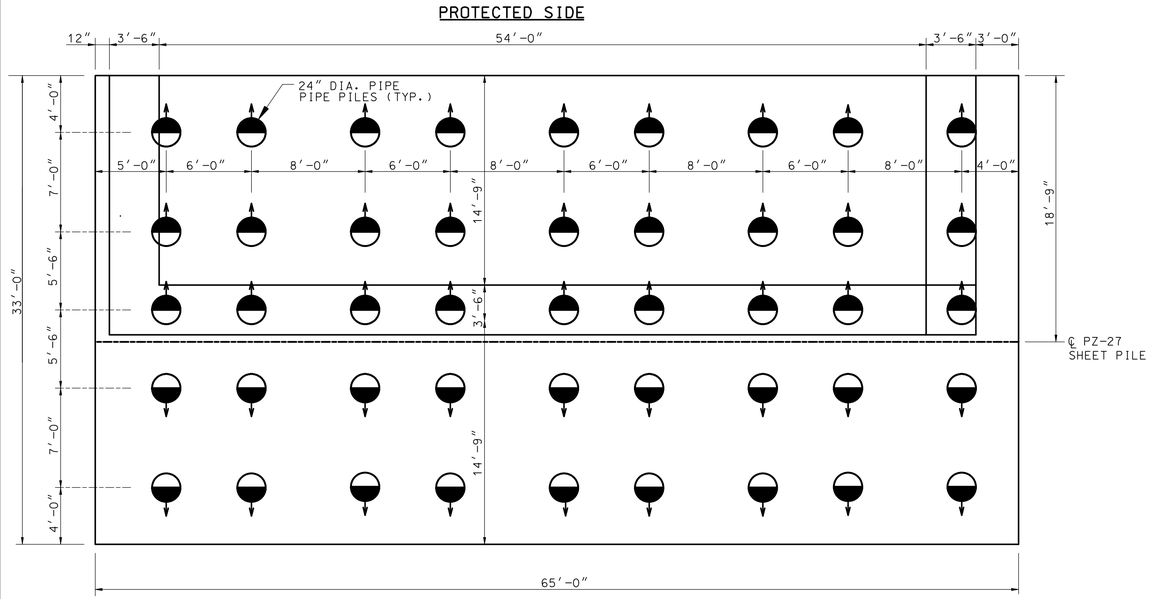

MONOLITH 201
FOUNDATION PLAN
SCALE: 1/4"=1'-0"

(NOTE:)
WEST SIDE T-WALL
SAME OPPOSITE HAND.

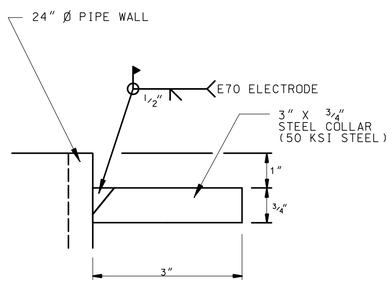

DETAIL 1
N.T.S.

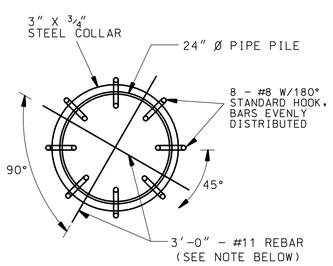

SECTION A
N.T.S.

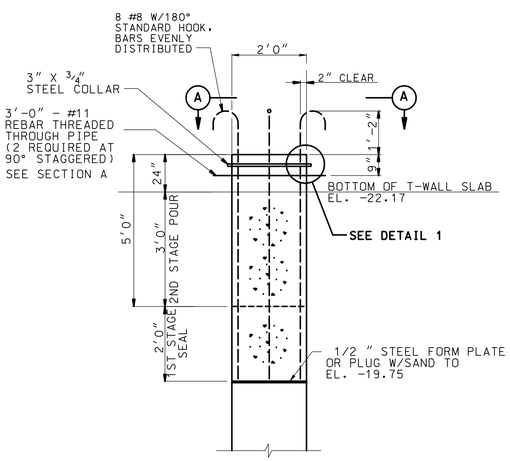

PILE TENSION CONNECTION (ALL PILES)
N.T.S.

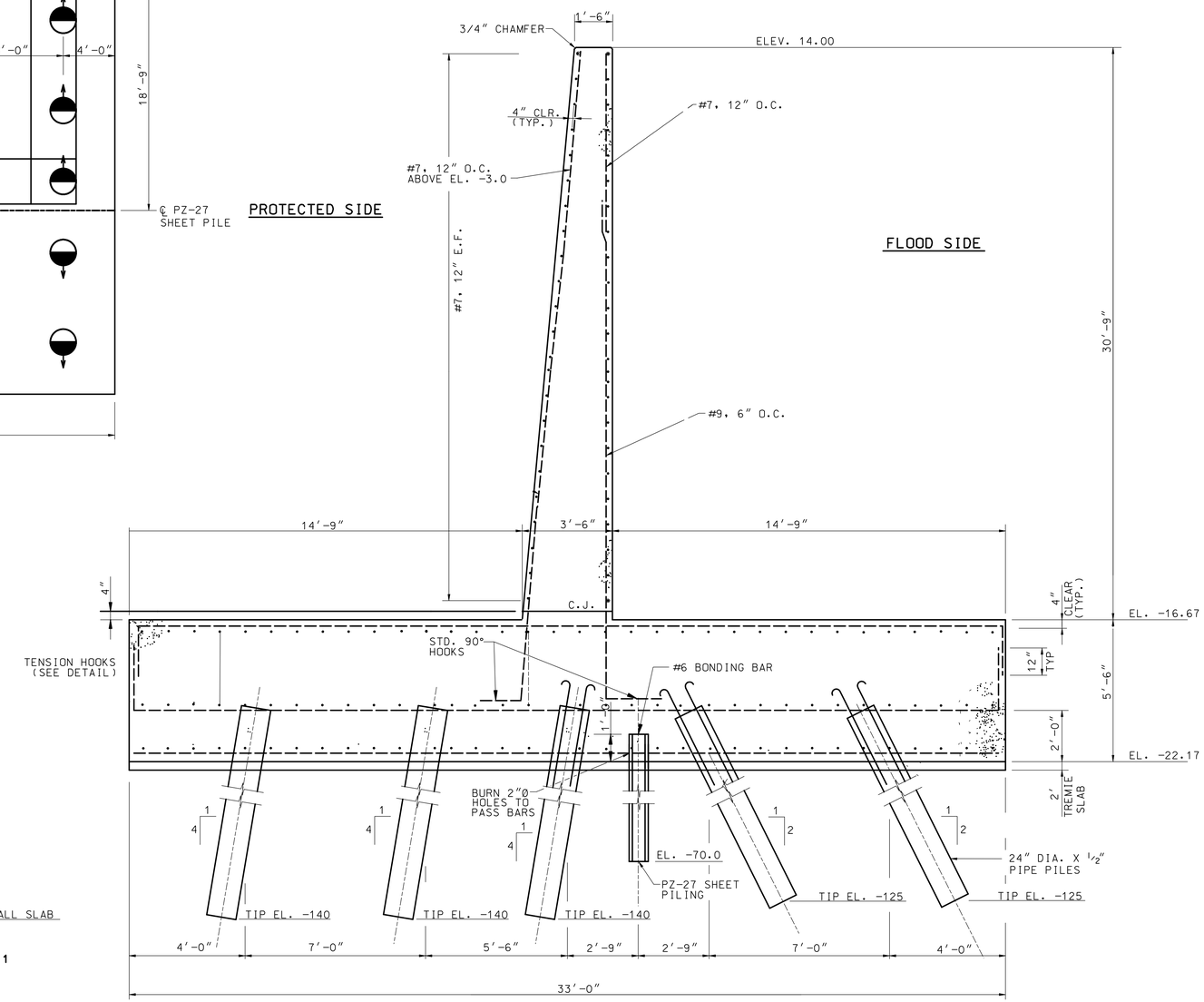

TYPICAL T-WALL SECTION (EAST SIDE)
NTS

SCALE: 1"=1'
0 1' 2'
SCALE:1/2"=1'
0 1' 2' 4'

US Army Corps of Engineers®
NEW ORLEANS DISTRICT

MARK	DESCRIPTION	DATE	APPR.

MARK	DESCRIPTION	DATE	APPR.

U.S. ARMY CORPS OF ENGINEERS
NEW ORLEANS DISTRICT
NEW ORLEANS, LOUISIANA

DESIGNED BY: Joe A. Designer
DWN BY: XXX
CKD BY: XXX
SUBMITTED BY: Bob A. Submitter
PLOT SCALE: XXXX:1
PLOT DATE: MM/DD/YYYY
SIZE: ANSI D
FILE NAME: XXXXXXXX.dgn
DATE: DD-MON-YYYY
SOLICITATION NO.: W912P8-##-X-####
CONTRACT NO.: W912P8-##-X-####
FILE NUMBER: H-##-#####

WEST BANK AND VICINITY, HURRICANE PROTECTION PROJECT
WBV - 46.2
HARVEY CANAL SECTOR GATE
PHASE II
JEFFERSON PARISH, LOUISIANA

FRONTING T-WALLS, PLAN AND SECTION

SHEET IDENTIFICATION
2-8 OF 2-11

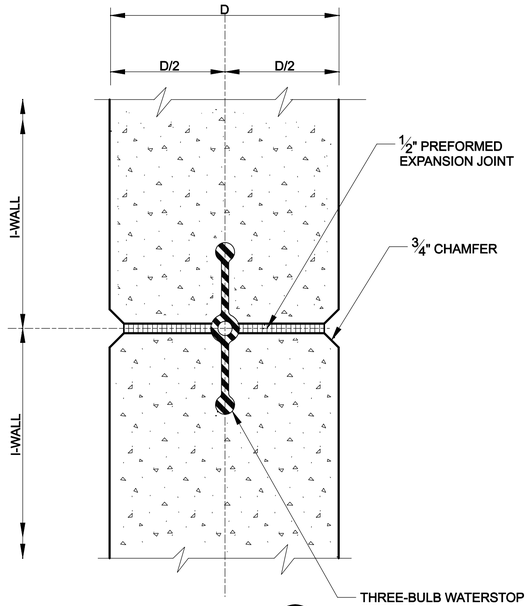

SECTION B

SCALE: 3" = 1' - 0"

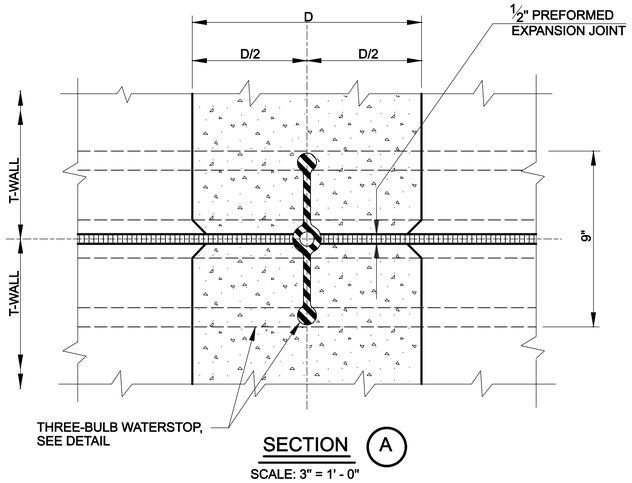

SECTION A

SCALE: 3" = 1' - 0"

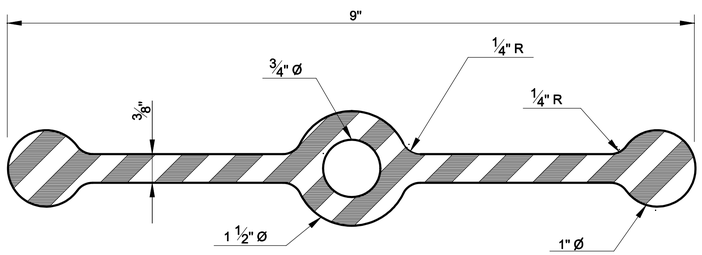

THREE-BULB WATERSTOP

SCALE: 12" = 1' - 0"

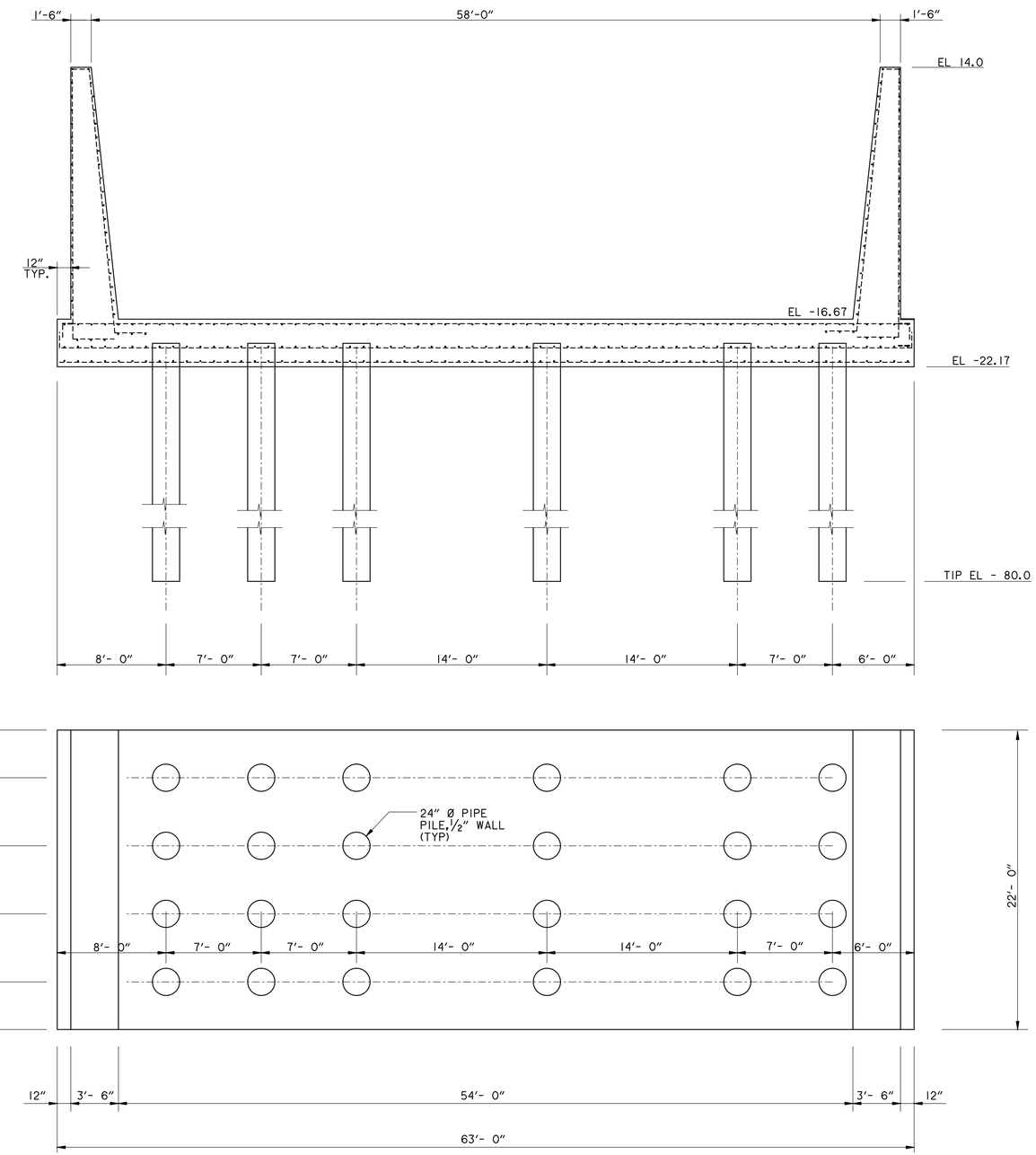

U-FRAME PLAN & SECTION (EAST SIDE LOOKING NORTH)

SCALE: 1" = 10'- 0"

* WEST SIDE SIMILAR, OPPOSITE HAND

SCALE: 1"= 10'

0 10' 20'

SCALE: 3"=1'

0 3" 6" 9" 12"

SCALE:1"=1"

0 1" 2"

US Army Corps of Engineers®
NEW ORLEANS DISTRICT

MARK	DESCRIPTION	DATE	APPR.

MARK	DESCRIPTION	DATE	APPR.

U.S. ARMY CORPS OF ENGINEERS
NEW ORLEANS DISTRICT
NEW ORLEANS, LOUISIANA

DESIGNED BY: Joe A. Designer
DWN BY: XXX
CKD BY: XXX
SUBMITTED BY: Bob A. Submitter
PLOT SCALE: XXXX:1
PLOT DATE: MM/DD/YYYY
SIZE: ANSI D
FILE NAME: XXXXXXXX.dgn
DATE: DD-MON-YYYY
SOLICITATION NO.: W912P8-##-X-####
CONTRACT NO.: W912P8-##-X-####
FILE NUMBER: H-##-#####

WEST BANK AND VICINITY, HURRICANE PROTECTION PROJECT
WBV - 46.2
HARVEY CANAL SECTOR GATE
PHASE II
JEFFERSON PARISH, LOUISIANA

U-FRAME,
PLAN AND SECTION

SHEET IDENTIFICATION
2-9 OF 2-11

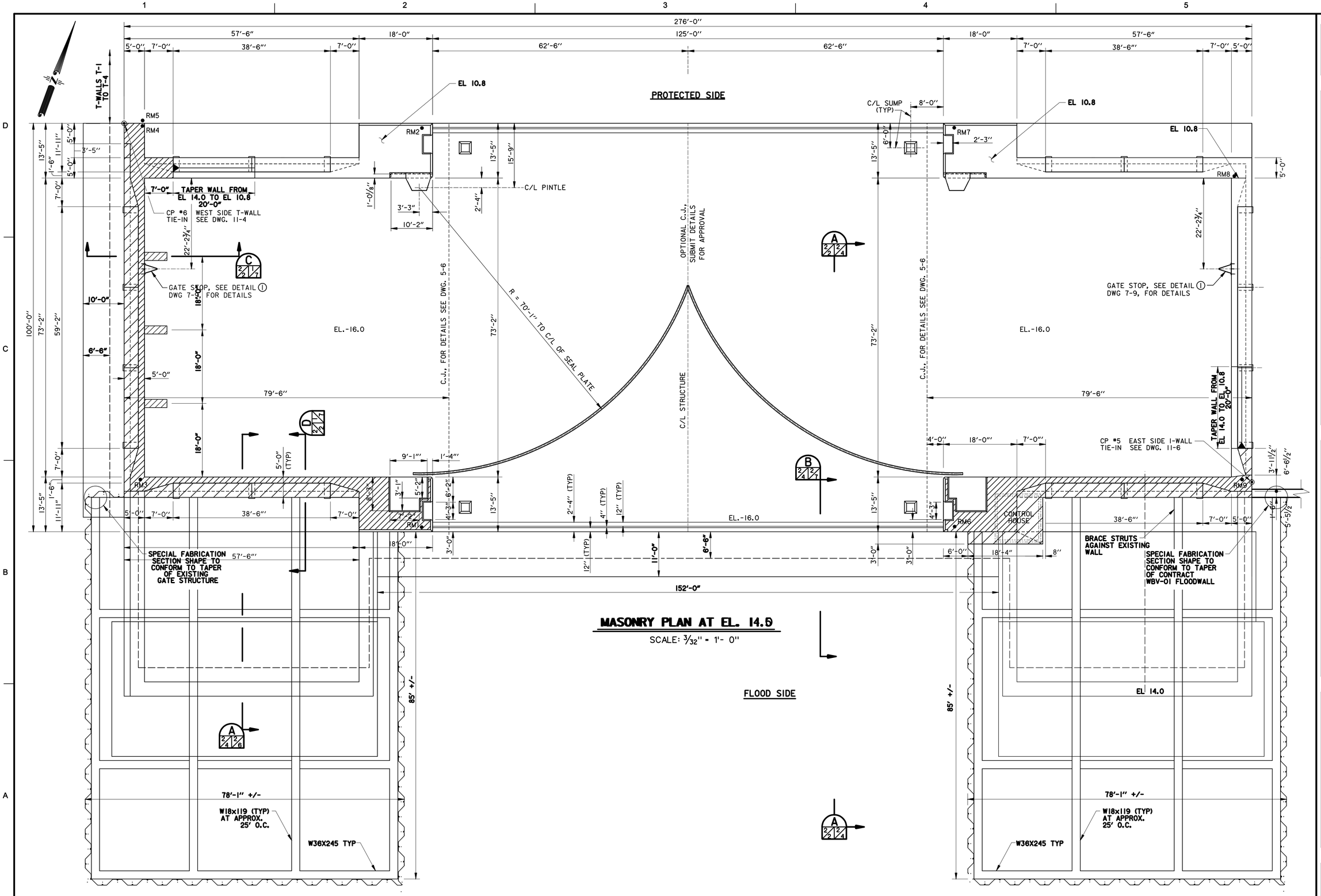

US Army Corps of Engineers®
NEW ORLEANS DISTRICT

MARK	DESCRIPTION	DATE	APPR.

MARK	DESCRIPTION	DATE	APPR.

U.S. ARMY CORPS OF ENGINEERS
NEW ORLEANS DISTRICT
NEW ORLEANS, LOUISIANA

DESIGNED BY: Joe A. Designer
DWN BY: XXX
CKD BY: XXX
SUBMITTED BY: Bob A. Submitter
PLOT SCALE: XXXX:1
PLOT DATE: MM/DD/YYYY
SIZE: ANSI D
FILE NAME: XXXXXXXX.dgn
DATE: DD-MON-YYYY
SOLICITATION NO.: W912P8-##-X-####
CONTRACT NO.: W912P8-##-X-####
FILE NUMBER: H-##-#####

WEST BANK AND VICINITY, HURRICANE PROTECTION PROJECT
WBV - 46.2
HARVEY CANAL SECTOR GATE
PHASE II
JEFFERSON PARISH, LOUISIANA

TRS - ALT 2A

SHEET IDENTIFICATION
2-10 OF 2-11

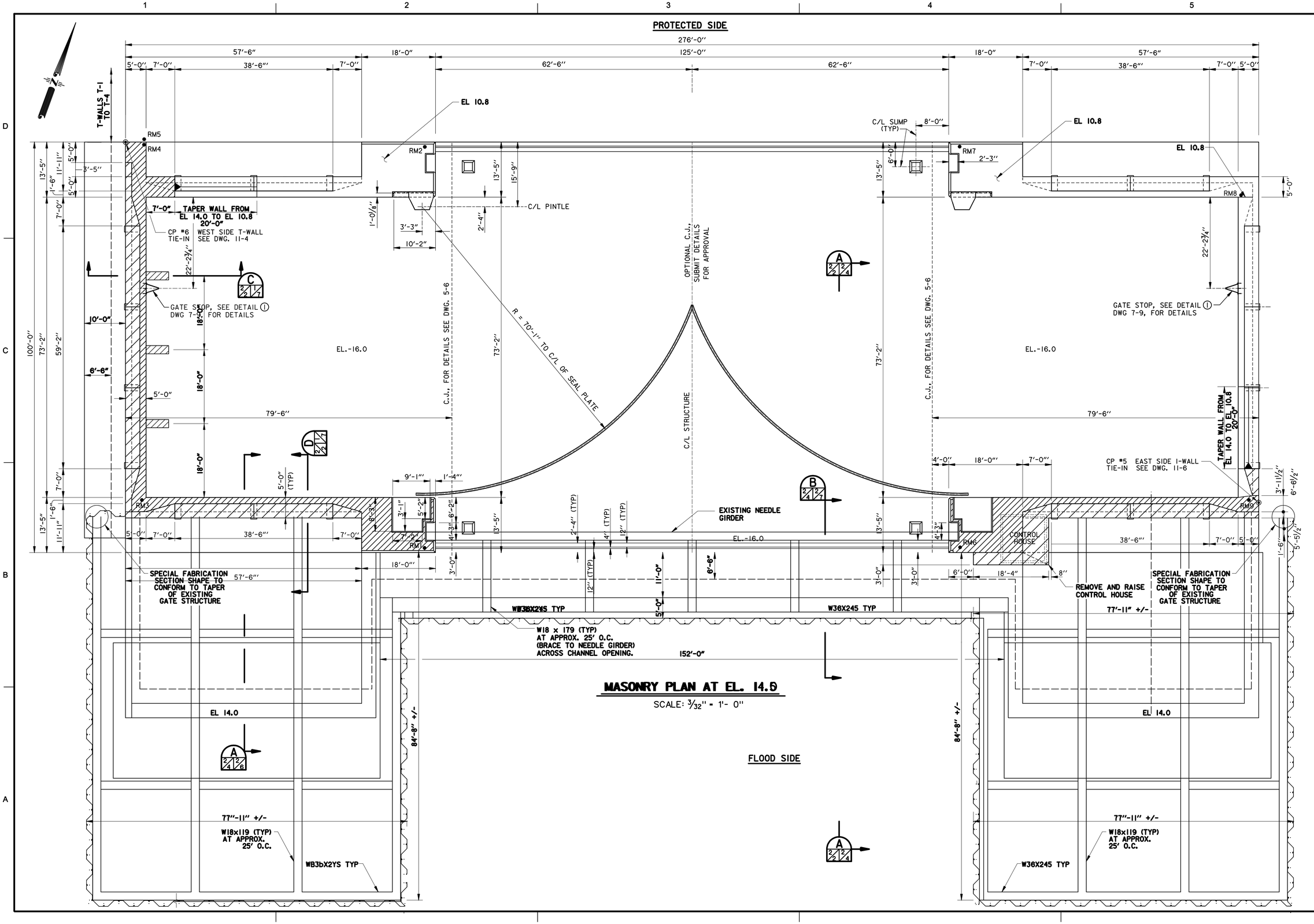

MASONRY PLAN AT EL. 14.0

SCALE: 3/32" = 1'- 0"

US Army Corps of Engineers®
NEW ORLEANS DISTRICT

MARK	DESCRIPTION	DATE	APPR.

MARK	DESCRIPTION	DATE	APPR.

U.S. ARMY CORPS OF ENGINEERS
NEW ORLEANS DISTRICT
NEW ORLEANS, LOUISIANA

DESIGNED BY: Joe A. Designer
DWN BY: XXX
CKD BY: XXX
SUBMITTED BY: Bob A. Submitter
PLOT SCALE: XXXX:1
PLOT DATE: MM/DD/YYYY
SIZE: ANSI D
FILE NAME: XXXXXXXX.dgn
DATE: DD-MON-YYYY
SOLICITATION NO.: W912P8-##-X-####
CONTRACT NO.: W912P8-##-X-####
FILE NUMBER: H-##-#####

WEST BANK AND VICINITY, HURRICANE PROTECTION PROJECT
WBV - 46.2
HARVEY CANAL SECTOR GATE
PHASE II
JEFFERSON PARISH, LOUISIANA

TRS - ALT 2B

SHEET IDENTIFICATION
2-11 OF 2-11

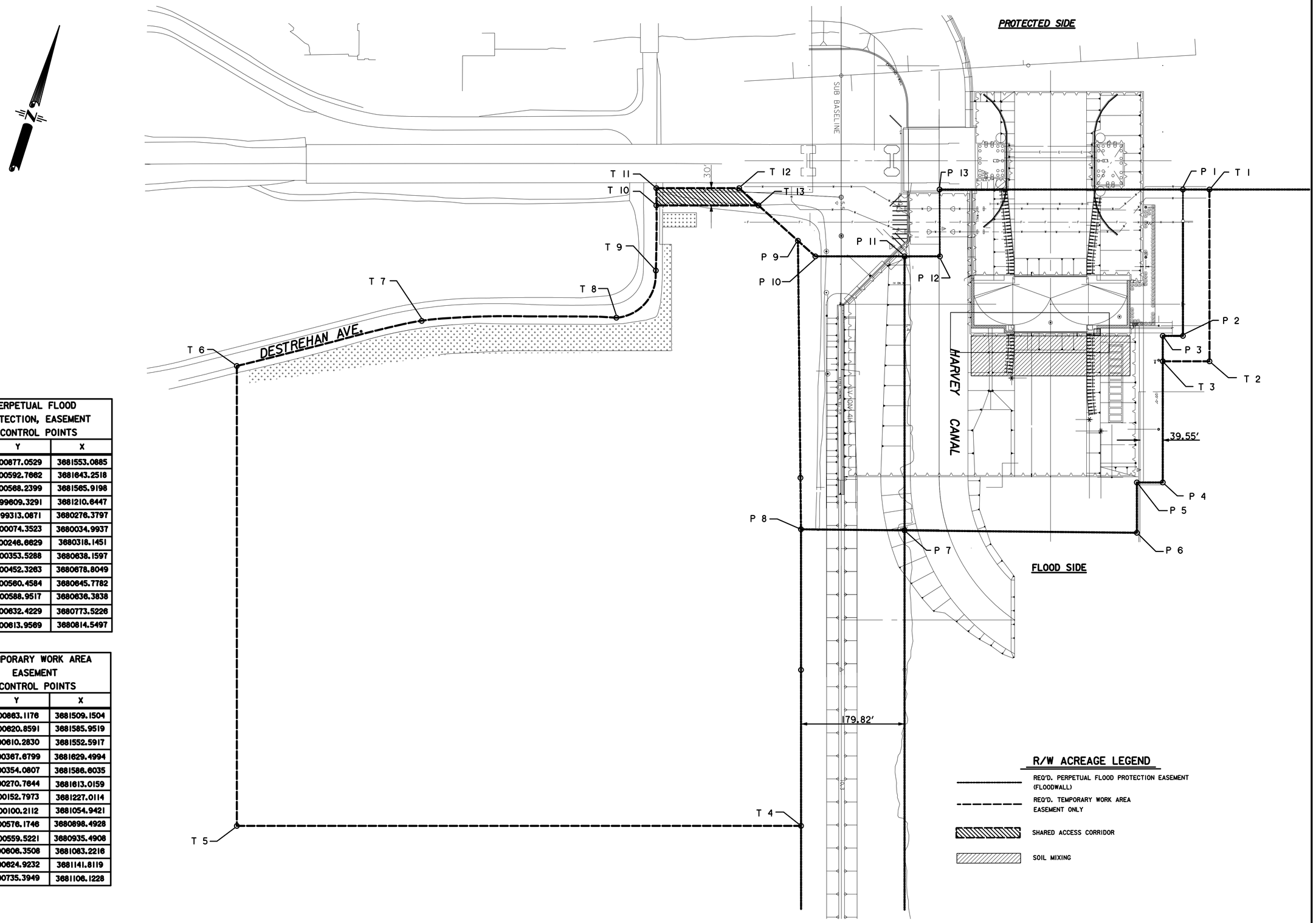

PERPETUAL FLOOD PROTECTION, EASEMENT CONTROL POINTS		
POINT	Y	X
T1	500877.0529	3681553.0885
T2	500592.7662	3681643.2518
T3	500568.2399	3681565.9198
T4	499609.3291	3681210.6447
T5	499313.0871	3680276.3797
T6	500074.3523	3680034.9937
T7	500246.6629	3680318.1451
T8	500353.5288	3680638.1597
T9	500452.3263	3680678.8049
T10	500560.4584	3680645.7782
T11	500588.9517	3680636.3838
T12	500632.4229	3680773.5226
T13	500613.9569	3680814.5497

TEMPORARY WORK AREA EASEMENT CONTROL POINTS		
POINT	Y	X
P1	500863.1176	3681509.1504
P2	500620.8591	3681585.9519
P3	500610.2830	3681552.5917
P4	500367.6799	3681629.4994
P5	500354.0807	3681586.6035
P6	500270.7644	3681613.0159
P7	500152.7973	3681227.0114
P8	500100.2112	3681054.9421
P9	500576.1746	3680898.4928
P10	500559.5221	3680935.4908
P11	500606.3508	3681083.2216
P12	500624.9232	3681141.8119
P13	500735.3949	3681106.1228

R/W ACREAGE LEGEND

- REQ'D. PERPETUAL FLOOD PROTECTION EASEMENT (FLOODWALL)
- REQ'D. TEMPORARY WORK AREA EASEMENT ONLY
- SHARED ACCESS CORRIDOR
- SOIL MIXING

US Army Corps of Engineers®
NEW ORLEANS DISTRICT

MARK	DESCRIPTION	DATE	APPR.	MARK	DESCRIPTION	DATE	APPR.

U.S. ARMY CORPS OF ENGINEERS
NEW ORLEANS DISTRICT
NEW ORLEANS, LOUISIANA

DESIGNED BY: | DATE:
DWN BY: | CKD BY: | SOLICITATION NO.:
SUBMITTED BY: | CONTRACT NO.:
PLOT SCALE: | PLOT DATE: | FILE NUMBER:
SIZE: | FILE NAME:

WEST BANK AND VICINITY, NEW ORLEANS, LOUISIANA
HURRICANE PROTECTION PROJECT
WEST OF ALGIERS CANAL
HARVEY CANAL SECTOR GATE COMPLEX
JEFFERSON PARISH, LOUISIANA

ALT I: RIGHT OF WAY SITE PLAN

SHEET IDENTIFICATION
R-1 OF R-2

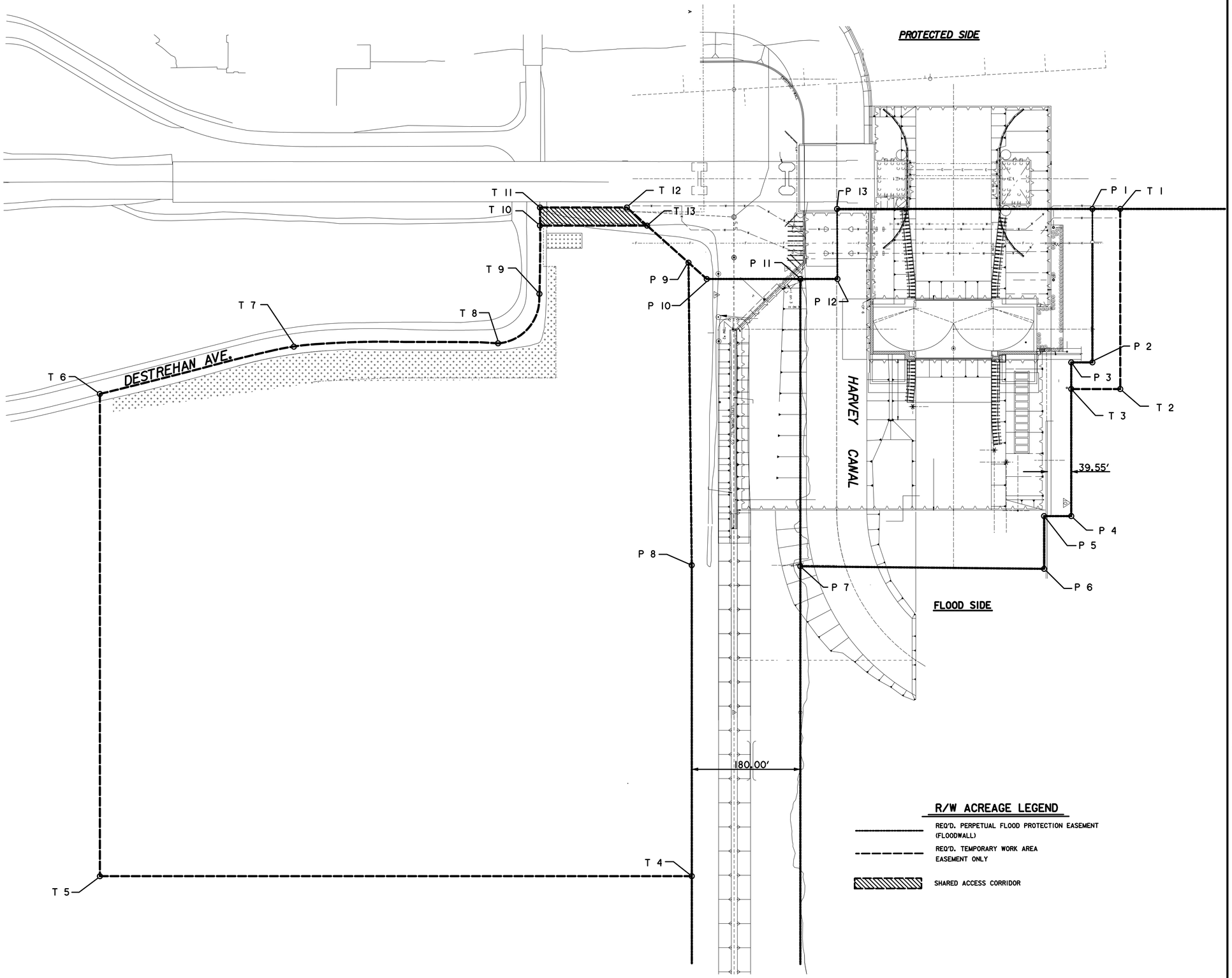

PERPETUAL FLOOD PROTECTION, EASEMENT CONTROL POINTS		
POINT	Y	X
T1	500877.0529	3681553.0885
T2	500592.7662	3681643.2518
T3	500568.2399	3681565.9198
T4	499609.3291	3681210.6447
T5	499313.0871	3680276.3797
T6	500074.3523	3680034.9937
T7	500246.6629	3680318.1451
T8	500353.5288	3680638.1597
T9	500452.3263	3680678.8049
T10	500560.4584	3680645.7782
T11	500588.9517	3680636.3838
T12	500632.4229	3680773.5226
T13	500613.9569	3680814.5497

TEMPORARY WORK AREA EASEMENT CONTROL POINTS		
POINT	Y	X
P1	500863.1176	3681509.1504
P2	500620.8591	3681585.9519
P3	500610.2830	3681552.5917
P4	500367.6799	3681629.4994
P5	500354.0807	3681586.6035
P6	500270.7644	3681613.0159
P7	500152.7973	3681227.0114
P8	500100.2112	3681054.9421
P9	500576.1746	3680898.4928
P10	500559.5221	3680935.4908
P11	500606.3508	3681083.2216
P12	500624.9232	3681141.8119
P13	500735.3949	3681106.1228

R/W ACREAGE LEGEND

REQ'D. PERPETUAL FLOOD PROTECTION EASEMENT (FLOODWALL)

REQ'D. TEMPORARY WORK AREA EASEMENT ONLY

SHARED ACCESS CORRIDOR

US Army Corps of Engineers®
NEW ORLEANS DISTRICT

MARK	DESCRIPTION	DATE	APPR.	MARK	DESCRIPTION	DATE	APPR.

U.S. ARMY CORPS OF ENGINEERS
NEW ORLEANS DISTRICT
NEW ORLEANS, LOUISIANA

DESIGNED BY: | DATE:
DWN BY: | CKD BY: | SOLICITATION NO.:
SUBMITTED BY: | CONTRACT NO.:
PLOT SCALE: | PLOT DATE: | FILE NUMBER:
SIZE: | FILE NAME:

WEST BANK AND VICINITY, NEW ORLEANS, LOUISIANA
HURRICANE PROTECTION PROJECT
WEST OF ALGIERS CANAL
HARVEY CANAL SECTOR GATE COMPLEX
JEFFERSON PARISH, LOUISIANA

ALT 2A & 2B: RIGHT OF WAY SITE PLAN

SHEET IDENTIFICATION
R-2 OF R-2