DEPARTMENT OF THE ARMY
NEW ORLEANS DISTRICT, CORPS OF ENGINEERS
P.O. BOX 60267
NEW ORLEANS, LOUISIANA 70160-0267

REPLY TO
ATTENTION OF

August 21, 2008

Planning, Programs, and
Project Management Division
Environmental Planning
And Compliance Branch

Decision Record

Individual Environmental Report #14
WESTWEGO TO HARVEY LEVEE
JEFFERSON PARISH, LOUISIANA

IER #14

Description of Proposed Action. The New Orleans District, US Army Corps of Engineers (CEMVN) proposes to construct and maintain a 100-year level of protection along the West Bank and Vicinity (WBV), Westwego to Harvey Levee project area. The proposed action is located in Jefferson Parish, near New Orleans, Louisiana. The term "100-year level of protection," refers to a level of protection that reduces the risk of hurricane surge and wave-driven flooding that the New Orleans Metropolitan area has a 1 percent chance of experiencing each year.

The project area lies within Jefferson Parish on the west bank of the Mississippi River. The levee extends from Westwego on the western end to Harvey Canal on the eastern end and is in the vicinity of the Mississippi River to the north; Barataria Bay and the Gulf of Mexico to the south; Harvey Canal to the east; and Jean Lafitte National Historical Park and Preserve, Barataria Preserve Unit (JLNHPP) and Lakes Salvador and Cataouatche to the west. Both Lakes Salvador and Cataouatche are estuaries that connect to the Gulf of Mexico through Barataria Bay. Tidal waters can be carried into the study area through these lakes and through canals in the vicinity.

The project is designed to use existing right-of-way (ROW) and levees within previously disturbed areas, therefore minimizing environmental consequences. The design, construction, and maintenance would be similar to that previously designed and constructed by the CEMVN along this alignment.

The proposed action has been divided into five main reaches for construction: WBV-14c, WBV-14b, WBV-14f, WBV-14d, and WBV-14e. Some reaches include floodwalls for pump station protection, identified as WBV-30, WBV-37, and WBV-43. Where needed, utilities would be relocated to cross the project in accordance with existing standards. Disruptions to existing facilities would be kept to a minimum. The proposed actions for the five reaches are as follows:

WBV-14c (North Levee)

Reach WBV-14c extends from its western end at the Westwego Pump Station # 2 to the abandoned Orleans Village Pump Station. The existing elevation of the earthen levee ranges between 8 feet (ft) and 10 ft NAVD 88. This reach includes the Westminster Pump Station (WBV-30) with a 522-ft long concrete floodwall. The Commercial Investment Trust (CIT) Tract

is partially located on the flood side of this reach. The CIT Tract consists of wetlands adjacent to Bayou Segnette, owned by the Federal government as the result of a lawsuit settled in 1994. The reach is surrounded by a canal on the protected side and bottomland hardwood forests and swamps on the flood side. The bottomland hardwood forests begin at the Westwego Pump Station #2 where they transition to cypress-tupelo swamps at the CIT Tract.

The proposed action consists of the construction of an earthen levee enlargement with a protected side shift within the existing ROW. The levee would span a distance of 3.29 miles, built to an elevation of 14 ft NAVD 88. Fronting protection would be built at the Westminster Pumping Station and other floodwalls would be constructed at the utility crossings within this reach. The floodwalls at the utility crossings total 485 ft, and would tie-in to the earthen levees on either end.

The majority of levee construction work would occur on the protected side of the levee, and stability berm work may occur on the flood side. All construction occurs within the existing ROW. The levee work may require geotextile fabric and/or deep soil mixing to strengthen the levee foundation. The deep soil mixing method involves the blending of a binder such as lime, cement, slag, and fly ash into the soil through a hollow stem auger and mixing tool arrangement to produce round "columns" of treated soil. Applications for this method include stability and support, seepage cutoff, and seismic retrofit. This method has proven to be a viable method to effectively improve the competency of soils in Southeast Louisiana. Strengthening of the foundation can also be achieved by installing geotextile fabric in the foundation of the levee.

The Westminster Pumping Station (WBV-30) discharges in the vicinity of the Grand Cross Canal. This pumping station has four 72-inch, 300 cubic feet per second (cfs) vertical pumps. Water passes through steel discharge tubes and empties into a discharge basin. The Westminster Pumping Station walls were constructed to elevations ranging from 9.5 to 13.60 ft NAVD 88. Although some heights of protection appear adequate, the walls are both geotechnically and structurally deficient when analyzed with respect to the new design criteria.

The proposed action for WBV-30 includes the construction of a continuous line of flood protection within the existing ROW, which would tie-in to the existing levees on either side, with limited effects on the existing pumping station. This protection would incorporate the use of pile-founded reinforced concrete floodwalls, constructed to an elevation of 16 ft NAVD 88 across the pump station discharge basin, and 14 ft NAVD 88 at the levee tie-in points. The additional wall height of 2 ft (from 14 to 16 ft) included for the walls within the pump station discharge basin is referred to as "structural superiority." Structural superiority is defined as the construction of a floodwall higher than recommended engineering standards, due to the major disruption in constructing around the existing pump station and providing future maintenance.

WBV-14b (Orleans Village Pump Station to Highway 45)

Reach WBV-14b extends from the abandoned Orleans Village Pump Station to Highway (Hwy) 45. The existing elevation of the earthen levee ranges between 10 ft and 14 ft NAVD 88. The reach includes Ames Pump Station (WBV-37) and Mount Kennedy Pump Station (WBV-43), with 475 ft and 729 ft long concrete floodwalls, respectively. The reach is surrounded by a canal and residential structures on the protected side, and by cypress-tupelo swamps and borrow pits on the flood side. The six borrow pits adjacent to the levee were excavated in 1999 and 2001, totaling approximately 110 acres. EA # 439 described the six borrow pits in detail and evaluated the impacts. The abandoned Oak Cove Pump Station is also located within this reach.

The proposed action consists of the construction of an earthen levee enlargement with a flood side shift within the existing ROW. The levee would span a distance of 2.77 miles, built to an elevation of 14 ft NAVD 88. The existing borrow pits along the flood side of the existing levee may need to be partially or fully filled to support the levee enlargement project. Fronting protection would be built at the Ames and Mount Kennedy Pump Stations and other floodwalls would be constructed at the utility crossings within this reach. The floodwalls at the utility crossings total 576 ft, and would tie-in to the earthen levees on either end.

The majority of levee construction work would occur on the flood side of the levee, and stability berm work may occur on the protected side. All levee construction occurs within the existing ROW. The levee work may require geotextile fabric and/or deep soil mixing to strengthen the levee foundation.

The Ames Pumping Station (WBV-37) discharges into the Millaudon Canal. This pumping station has two 84-inch, 300 cfs vertical pumps, four 72-inch, 300 cfs vertical pumps, and one 132-inch, 1,050 cfs horizontal pump. Water passes through steel discharge tubes and empties into a discharge basin. The Ames Pumping Station walls were constructed to an elevation of 16.9 ft NAVD 88. Although some heights of protection appear adequate, the walls are both geotechnically and structurally deficient when analyzed with respect to the new design criteria.

The proposed action for WBV-37 includes the construction of a continuous line of flood protection within the existing ROW, which would tie-in to the existing levees on either side, with limited effects on the existing pumping station. This protection would incorporate use of pile-founded reinforced concrete floodwalls/sluice gate structure, constructed to an elevation of 16.0 ft NAVD 88 across the pump station discharge basin, and 14 ft NAVD 88 at the levee tie-in points. Structural superiority of 2 ft is included in the wall height within the pump station discharge basin.

The Mount Kennedy Pumping Station (WBV-43) also discharges into the Millaudon Canal. This pumping station has three 48-inch, 500 cfs vertical pumps. Water passes through steel discharge tubes and empties into a discharge basin. The Mount Kennedy Pumping Station walls were constructed to an elevation of 15.80 ft NAVD 88 in front of the station and at an approximate elevation of 15.80 ft NAVD 88 at the tie-in walls. Although some heights of protection appear adequate, the walls are both geotechnically and structurally deficient when analyzed with respect to the new design criteria.

The proposed action for WBV-43 includes the construction of a continuous line of flood protection, partially outside of the existing ROW, which would tie-in to the existing levees on either side, with limited effects on the existing pumping station. Permanent additional ROW would be required on both the flood side and protected side of the project to implement the improvements. The current plan shows a range of 40 ft to 50 ft of additional permanent ROW that would be required along the length of the protected side of the project. On the flood side of the project, a range of 10 ft to 20 ft of additional permanent ROW would be required on the south side of Millaudon Canal.

The proposed action would incorporate the use of pile-founded reinforced concrete floodwalls, constructed to an elevation of 16 ft NAVD 88 across the pump station discharge basin, and 16 ft NAVD 88 at the levee tie-in points. Structural superiority of 2 ft is included in the wall height within the pump station discharge basin.

WBV-14f (Highway 45 to V-Line Levee Floodwall)

Reach WBV-14f extends from Highway 45 to the V-line levee floodwall. The existing elevation of the earthen levee is 12 ft NAVD 88. The reach is surrounded by a canal on the protected side and bottomland hardwood forests on the flood side. The ROW on the flood side includes 25 acres of existing borrow pits that were addressed in EA # 198.

The proposed action consists of the construction of an earthen levee enlargement with a flood side shift within the existing ROW. The levee would span a distance of 2.73 miles, built to an elevation of 14 ft NAVD 88. The existing borrow pits along the flood side of the existing levee may need to be partially or fully filled to support the levee enlargement project. The floodwalls at the utility crossings total 757 ft, and would tie-in to the earthen levees on either end.

The majority of levee construction work would occur on the flood side of the levee, and stability berm work may occur on the protected side. All levee construction occurs within the existing ROW. The levee work may require geotextile fabric and/or deep soil mixing to strengthen the levee foundation.

WBV-14d (V-Line Levee Floodwall)

Reach WBV-14d extends between Highway (Hwy) 45 and Hwy 3134 (Lafitte-Larose Hwy) and includes protection across Hwy 45 and the elevated Hwy 3134. The reach, comprising only a floodwall along the V-line levee, has an existing elevation of 11 ft NAVD 88. The JLNHPP is located on the flood side of this reach, and bottomland hardwood forests and a canal is located on the protected side.

The proposed action consists of replacing the existing sheet pile floodwall with a concrete floodwall within the existing ROW. The floodwall would span a distance of 7,008 ft, built to an elevation of 14 ft NAVD 88. As part of the proposed action, the floodgate at Hwy 45 would also be replaced with a swing gate. The existing ramp at Hwy 3134 would be raised to ensure a continuous line of protection in the levee and floodwall system. The new floodwall would be constructed so that it does not encroach upon JLNHPP.

WBV-14e (V-Line Levee)

Reach WBV-14e extends from Hwy 3134 to its terminus on the eastern end of the V-line levee. The existing elevation of the earthen levee ranges between 10 ft and 12 ft NAVD 88. This reach includes a 200 ft wide by 15 ft deep interior drainage canal on the protected side and the Bayou aux Carpes 404(c) site on the flood side.

The proposed action consists of the construction of an earthen levee enlargement with a protected side shift, partially outside the existing ROW. The levee would span a distance of 1.78 miles, built to an elevation of 14 ft NAVD 88. An additional 1,500 ft of ROW would be required between Hwy 3134 and the vertex of the "V" to allow the highway to be raised between the two reaches. The existing culverts under Hwy 3134 would be replaced to accommodate construction of the levee section and the elevated highway. These culverts would be designed to accommodate animal passage. An additional 200 ft of ROW would be required on the protected side from the vertex of the "V" to the eastern terminus to facilitate canal relocation for the levee enlargement. About 210 ft of floodwalls would be required to tie-in the levee to the elevated Hwy 3134, providing a continuous line of protection.

All of the construction work would occur on the protected side of the levee, partially outside of the existing ROW. Permanent additional ROW would be required to implement the construction work. The levee work may require geotextile fabric and/or deep soil mixing to strengthen the levee foundation.

Draft IER #14, which detailed the impacts to the proposed actions, was released for public review on 30 June 2008. Stakeholders had until 4 August 2008 to comment on the document. Comments were received from Federal governmental agencies. Public meetings were held on 21 August, 25 March, and 15 January 2008, and 23 October, 19 September, 19 July, and 13 June 2007.

Factors Considered in Determination. CEMVN has assessed the impacts of the proposed action on significant resources in the proposed project area, including bottomland hardwood forests, cypress-tupelo swamps, Bayou aux Carpes 404(c) site, fisheries and aquatic habitat, wildlife, threatened and endangered species, air quality, water quality, cultural resources, recreation, aesthetics, and socioeconomic resources.

All jurisdictional wetlands and non-jurisdictional bottomland hardwood forest impacts were assessed by the US Fish and Wildlife Service (USFWS) and CEMVN under NEPA, Fish and Wildlife Coordination Act, and Section 906 (b) WRDA 1986 requirements. The impacts for the proposed action are shown in Table 1.

Mitigation IERs will be prepared documenting and compiling the unavoidable impacts discussed in each IER. The mitigation IERs will implement compensatory mitigation as early as possible. All mitigation activities will be consistent with standards and policies established in the Clean Water Act Section 404 and the appropriate USACE policies and regulations governing this activity.

Table 1: Impacts to jurisdictional bottomland hardwoods and cypress-tupelo swamps

Habitat Type	Acres	AAHUs Needed (average annual habitat units)
Bottomland Hardwoods	90.50	48.58
Cypress-tupelo swamps	29.75	17.02

Environmental Design Commitments. All comments made by US Fish and Wildlife Service (USFWS) and US Environmental Protection Agency (USEPA) have been incorporated by reference into the IER. If any unrecorded cultural resources are determined to exist within the proposed project site, then no work will proceed in the area containing these cultural resources until a CEMVN staff archeologist has been notified and final coordination with the Louisiana State Historic Preservation Officer (SHPO) and Tribal Historic Preservation Officer has been completed.

Agency & Public Involvement. Various governmental agencies, non-governmental organizations, and citizens were engaged throughout the preparation of IER #14. Agency staff from USFWS, National Marine Fisheries Service (NMFS), USEPA, US Geologic Survey (USGS), National Park Service (NPS), Louisiana Department of Natural Resources (LDNR), and

Louisiana Department of Wildlife and Fisheries (LDWF) were part of an interagency team that has and will continue to have input throughout the Greater New Orleans Hurricane and Storm Damage Risk Reduction System (GNOHSDRRS) planning process (Appendix C).

There have been over 60 public meetings since March 2007 about proposed GNOHSDRRS work. Issues relating to draft IER #14 have been discussed at some meetings. CEMVN sends out public notices in local and national newspapers, news releases (routinely picked up by television and newspapers in stories and scrolls), and mail notifications to stakeholders for each public meeting. In addition, www.nolaenvironmental.gov was set up to provide information to the public regarding proposed GNOHSDRRS work. CEMVN has recently started sending out e-mail notifications of the meetings to approximately 300 stakeholders who requested to be notified by this method. Public meetings will continue throughout the planning process.

Draft IER #14 Public Review Period

1. Agency Comments (found in Appendix B)
    a. USFWS
        1. CAR dated 18 August 2008
        2. Comment letter dated 31 July 2008
    b. USEPA
        1. Comment letter undated

2. Public Comments (none received)

Verbal comments about the proposed action were received at all public meetings.

Decision. The CEMVN Environmental Planning and Compliance Branch has assessed the potential environmental impacts of the proposed action described in this IER, and performed a review of the comments received during the public review period for Draft IER #14, as well as public meetings held on 21 August, 25 March, and 15 January 2008, and 23 October, 19 September, 19 July, and 13 June 2007. Furthermore, all practicable means to avoid or minimize adverse environmental effects have been incorporated into the recommended plan. Approximately 48.58 AAHUs of bottomland hardwood wetland impacts and 17.02 AAHUs of cypress-tupelo swamp impacts will be addressed in a separate IER specifically written for mitigation implementation.

The public interest will be best served by implementing the selected plan as described in IER #14 in accordance with the environmental considerations discussed above.

CEMVN will prepare a Comprehensive Environmental Document (CED) that may contain additional information related to IER #14 that becomes available after the execution of the Final IER. The CED will provide a final mitigation plan, comprehensive cumulative impacts analysis, and any additional information that addresses outstanding data gaps in any of the IERs.

I have reviewed IER #14, and have considered agency recommendations and comments received from the public during the scoping phase and comment periods. I find the recommended plan fully addresses the objectives as set forth by the Administration and Congress in the 3rd, 4th, and 5th Supplemental Appropriations.

The plan is justified, in accordance with environmental statutes, and it is in the public interest to construct the actions as described in this document.

8-26-08
Date

Alvin B. Lee
Colonel, U.S. Army
District Commander

FINAL INDIVIDUAL ENVIRONMENTAL REPORT

WEST BANK AND VICINITY

WESTWEGO TO HARVEY LEVEE

JEFFERSON PARISH, LOUISIANA

IER # 14

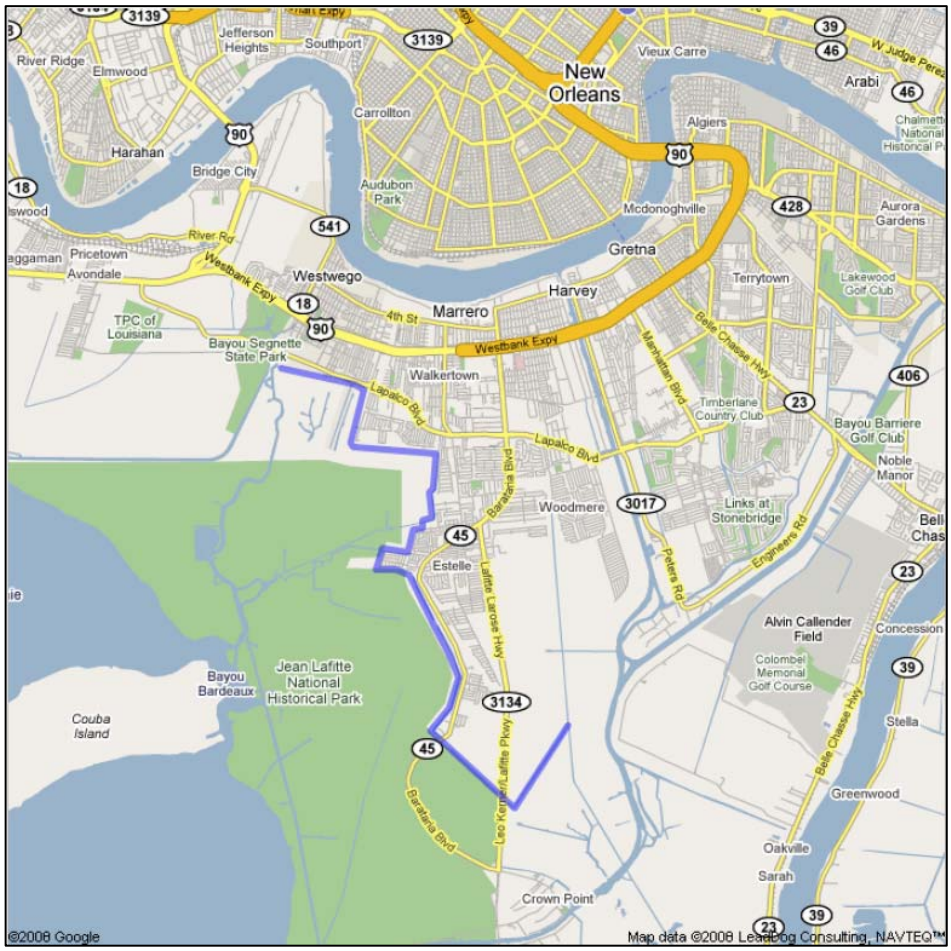

US Army Corps of Engineers®

AUGUST 2008

TABLE OF CONTENTS

TITLE **PAGE**

1.0 INTRODUCTION 1

1.1 PURPOSE AND NEED FOR THE PROPOSED ACTION 1
1.2 AUTHORITY FOR THE PROPOSED ACTION 2
1.3 PRIOR REPORTS 2
1.4 INTEGRATION WITH OTHER INDIVIDUAL ENVIRONMENTAL REPORTS 4
1.5 PUBLIC CONCERNS 5
1.6 DATA GAPS AND UNCERTAINTIES 5

2.0 ALTERNATIVES 6

2.1 ALTERNATIVES DEVELOPMENT AND PRELIMINARY SCREENING CRITERIA 6
2.2 DESCRIPTION OF THE ALTERNATIVES 7
2.3 PROPOSED ACTION 7
2.3.1 WBV-14c (North Levee) 8
2.3.2 WBV-14b (Orleans Village Pump Station to Highway 45) 10
2.3.3 WBV-14f (Highway 45 to V-Line Levee Floodwall) 12
2.3.4 WBV-14d (V-Line Levee Floodwall) 13
2.3.5 WBV-14e (V-Line Levee) 14
2.3.6 Actions Common to All Reaches 14
2.3.6.1 Armoring 14
2.3.6.2 Relocations 15
2.3.6.3 Operations and Maintenance 15
2.3.6.4 Temporary Flood Protection Contractually Required During Construction 15
2.4 ALTERNATIVES TO THE PROPOSED ACTION 16
2.4.1 WBV-14c (North Levee) 16
2.4.1.1 No Action 16
2.4.2 WBV-14b (Orleans Village Pump Station to Highway 45) 16
2.4.2.1 No Action 16
2.4.3 WBV-14f (Highway 45 to V-Line Levee Floodwall) 16
2.4.3.1 No Action 16
2.4.4 WBV-14d (V-Line Levee Floodwall) 17
2.4.4.1 No Action 17
2.4.5 WBV-14e (V-Line Levee) 17
2.4.5.1 No Action 17
2.5 ALTERNATIVES ELIMINATED FROM FURTHER CONSIDERATION 17
2.5.1 Hollow Core Levees 17
2.5.2 Options including a Protected Side Shift, Flood Side Shift, Straddle Levee Expansion, Floodwall for Entire Levee Reach, and Levee for Existing Floodwall 18
2.5.2.1 WBV-14c 19
2.5.2.2 WBV-14b 19
2.5.2.3 WBV-14f 19
2.5.2.4 WBV-14d 19
2.5.2.5 WBV-14e 21
2.5.3 Non-Structural Flood Protection Alternative 21
2.5.3.1 Acquisition of Flood-Prone Structures 21
2.5.3.2 Floodplain Zoning 22
2.5.3.3 Floodproofing 22
2.6 SUMMARY TABLE 23

3.0 AFFECTED ENVIRONMENT AND ENVIRONMENTAL CONSEQUENCES 25

3.1 ENVIRONMENTAL SETTING 25

3.1.1 Physiography ... *25*
3.1.2 Geology ... *25*
3.1.3 Climatology/Hydrology ... *26*
3.1.3.1 Climate ... 26
3.1.3.2 Tropical Storms and Hurricanes ... 27
3.2 SIGNIFICANT RESOURCES ... 27
3.2.1 Bottomland Hardwood Forests ... *28*
3.2.1.1 Existing Conditions ... 28
3.2.1.2 Discussion of Impacts ... 29
3.2.2 Cypress-Tupelo Swamps ... *30*
3.2.2.1 Existing Conditions ... 30
3.2.2.2 Discussion of Impacts ... 30
3.2.3 Bayou aux Carpes Wetland Area (Section 404(c) Site) ... *31*
3.2.3.1 Existing Conditions ... 32
3.2.3.2 Discussion of Impacts ... 33
3.2.4 Fisheries and Aquatic Habitat ... *34*
3.2.4.1 Existing Conditions ... 34
3.2.4.2 Discussion of Impacts ... 34
3.2.5 Wildlife ... *37*
3.2.5.1 Existing Conditions ... 37
3.2.5.2 Discussion of Impacts ... 38
3.2.6 Threatened and Endangered Species ... *40*
3.2.6.1 Existing Conditions ... 40
3.2.6.2 Discussion of Impacts ... 41
3.2.7 Air Quality ... *41*
3.2.7.1 Existing Conditions ... 41
3.2.7.2 Discussion of Impacts ... 42
3.2.8 Water Quality ... *43*
3.2.8.1 Existing Conditions ... 43
3.2.8.2 Discussion of Impacts ... 44
3.2.9 Cultural Resources ... *44*
3.2.9.1 Existing Conditions ... 44
3.2.9.2 Discussion of Impacts ... 46
3.2.10 Recreation ... *48*
3.2.10.1 Existing Conditions ... 48
3.2.10.2 Discussion of Impacts ... 48
3.2.11 Aesthetics ... *50*
3.2.11.1 Existing Conditions ... 50
3.2.11.2 Discussion of Impacts ... 51
3.3 SOCIOECONOMIC RESOURCES ... 51
3.3.1 Noise ... *51*
3.3.1.1 Existing Conditions ... 51
3.3.1.2 Discussion of Impacts ... 52
3.3.2 Transportation ... *52*
3.3.2.1 Existing Conditions ... 52
3.3.2.2 Discussion of Impacts ... 53
3.3.3 Population and Housing ... *53*
3.3.3.1 Existing Conditions ... 53
3.3.3.2 Discussion of Impacts ... 53
3.3.4 Business, Industry, and Public Facilities and Services ... *54*
3.3.4.1 Existing Conditions ... 54
3.3.4.2 Discussion of Impacts ... 54
3.3.5 Health and Safety ... *55*
3.3.5.1 Existing Conditions ... 55
3.3.5.2 Discussion of Impacts ... 55
3.3.6 Employment, Income, and Local Tax Base ... *55*

3.3.6.1 Existing Conditions 55
3.3.6.2 Discussion of Impacts 55
3.3.7 Environmental Justice 56
3.3.7.1 Existing Conditions Pertaining to Environmental Justice 56
3.3.7.2 Discussion of Impacts 57
3.4 HAZARDOUS, TOXIC, AND RADIOACTIVE WASTE 58
3.4.1 Existing Conditions: 58
3.4.2 Discussion of Impacts 58
3.4.2.1 No Action 58
3.4.2.2 Proposed Action for all Reaches 58

4.0 CUMULATIVE IMPACTS 59

5.0 SELECTION RATIONALE 62

6.0 COORDINATION AND CONSULTATION 62

6.1 PUBLIC INVOLVEMENT 62
6.2 AGENCY COORDINATION 63

7.0 MITIGATION 70

8.0 COMPLIANCE WITH ENVIRONMENTAL LAWS AND REGULATIONS 72

9.0 CONCLUSIONS 75

9.1 FINAL DECISION 75
9.2 PREPARED BY 76
9.3 LITERATURE CITED 77

10.0 APPENDICES 81

LIST OF TABLES

TITLE **PAGE**

Table 1: Summary of Reaches for IER #14 8
Table 2: Estimates of Major Construction Quantities for Levees in Reach WBV-14c 9
Table 3: Estimates of Major Construction Quantities for Reach WBV-30 9
Table 4: Estimates of Major Construction Quantities for Levees in Reach WBV-14b 11
Table 5: Estimates of Major Construction Quantities for Reach WBV-37 12
Table 6: Estimates of Major Construction Quantities for Reach WBV-43 12
Table 7: Estimates of Major Construction Quantities for Reach WBV-14f 12
Table 8: Estimates of Major Construction Quantities for Reach WBV-14d 14
Table 9: Estimates of Major Quantities for Construction of Reach WBV-14e 14
Table 10: Preliminary Alternative Screening Results 24
Table 11: Significant Resources in the Project Study Area 28
Table 12: Air Pollution Levels in Jefferson Parish 42
Table 13: Total Air Emissions from Construction Activities 43
Table 14: Minority and Low-Income Population in Project Area 57
Table 15: GNOHSDRRS Impacts and Compensatory Mitigation to be Completed 60
Table 16: IER #14 Preparation Team 77

LIST OF PHOTOS

TITLE **PAGE**

Photo 1. View of Mount Kennedy Pumping Station…….. 10
Photo 2. Levee in WBV-14f showing its proximity to residences ……..... 13
Photo 3. Hollow Core Levee Cross-Section View…….. 18
Photo 4. Bayou aux Carpes Section 404(c) Site…….……..... 32

LIST OF FIGURES

FIGURE **PAGE**

Figure 1: IER #14 – Component Reaches and Pump Stations..... 82
Figure 2: Typical Levee Footprint 83
Figure 3: WBV-14c: Proposed Action..... 84
Figure 4: WBV-14b: Proposed Action 85
Figure 5: WBV-14f: Proposed Action 86
Figure 6: WBV-14d: Proposed Action 87
Figure 7: WBV-14e: Proposed Action..... 88
Figure 8: Jean Lafitte National Historical Park and Preserve..... 89
Figure 9: Typical Section of Floodwall 90
Figure 10: New Lafitte-Larose Highway Ramp Plan 91

LIST OF APPENDICES

Appendix A: List of Acronyms and Definitions of Common Terms
Appendix B: Public Comment and Responses Summary
Appendix C: Members of Interagency Environmental Team
Appendix D: Figures

1.0 INTRODUCTION

The U.S. Army Corps of Engineers (USACE), Mississippi Valley Division, New Orleans District (CEMVN), has prepared this Individual Environmental Report # 14 (IER # 14) to evaluate the potential impacts associated with the proposed construction and maintenance of 100-year level of protection along the West Bank and Vicinity (WBV), Westwego to Harvey project area, which would include the rebuilding of 10.57 miles of earthen levees and the construction of 10,762 linear feet (ft) of floodwalls, including fronting protection at three existing pump stations. The proposed action is located in Jefferson Parish, LA (see figure 1 – all figures are located in appendix D). The term "100-year level of protection," as it is used throughout this document, refers to a level of protection that reduces the risk of hurricane surge and wave-driven flooding that the New Orleans Metropolitan area has a 1 percent chance of experiencing each year.

IER # 14 has been prepared in accordance with the National Environmental Policy Act (NEPA) of 1969 and the Council on Environmental Quality's (CEQ) Regulations (40 CFR §1500-1508), as reflected in the USACE Engineering Regulation, ER 200-2-2. The execution of an IER, in lieu of a traditional Environmental Assessment (EA) or Environmental Impact Statement (EIS), is provided for in ER 200-2-2, Environmental Quality (33 CFR §230) Procedures for Implementing the NEPA and pursuant to the CEQ NEPA Implementation Regulations (40 CFR §1506.11). The Alternative Arrangements can be found at www.nolaenvironmental.gov, and are herein incorporated by reference.

The CEMVN implemented Alternative Arrangements on 13 March 2007, under the provisions of the CEQ Regulations for Implementing NEPA (40 CFR §1506.11). This process was implemented in order to expeditiously complete environmental analysis for any changes to the authorized system and the 100-year level of the Greater New Orleans Hurricane and Storm Damage Risk Reduction System (GNOHSDRRS), formerly known as the Hurricane Protection System (HPS), authorized and funded by Congress and the Administration. The proposed actions are located in southeastern Louisiana and are part of the Federal effort to rebuild and complete construction of the GNOHSDRRS in the New Orleans Metropolitan area as a result of Hurricanes Katrina and Rita.

The draft IER was distributed for a 30-day public review and comment period on 30 June 2008. Comments were received during the public review and comment period until 4 August 2008, from parties in appendix B. The CEMVN District Commander reviewed agency comments, and interagency correspondence. The District Commander's decision on the proposed action is documented in the IER Decision Record.

1.1 PURPOSE AND NEED FOR THE PROPOSED ACTION

On 29 August 2005, Hurricane Katrina caused major damage to the GNOHSDRRS in southeast Louisiana. Hurricane Rita followed this storm on 24 September 2005, and made landfall on the Louisiana-Texas state border, causing further damage to the GNOHSDRRS in southern Louisiana. Since the storms, the USACE has been working with state and local officials to restore the GNOHSDRRS projects and related works in the affected area.

To date, approximately 60 percent of the New Orleans population has returned to the area. Many residences and businesses are waiting to see positive improvements in the level of protection before returning to the area. A USACE goal of June 2011 has been set for completion of much of the work that will raise the level of protection in the New Orleans area to a new standard and provide a level of security to residents and businesses that will allow and encourage them to return to the area.

The purpose of the proposed action is to construct and maintain 100-year flood protection for the residents and businesses in the Westwego to Harvey area (see figure 1). The proposed action results from a defined need to reduce flood risk and storm damage to residences, businesses, and other infrastructure from hurricanes (100-year storm events) and other high water events. The completed GNOHSDRRS would lower the risk of harm to citizens and damage to infrastructure during a storm event. The safety of people in the region is the highest priority of the CEMVN.

1.2 AUTHORITY FOR THE PROPOSED ACTION

The authority for the proposed action was provided as part of a number of hurricane protection projects spanning southeastern Louisiana, including the Lake Pontchartrain and Vicinity (LPV) Hurricane Protection Project and the WBV Hurricane Protection Project. Congress and the Administration granted a series of supplemental appropriations acts following Hurricanes Katrina and Rita to repair and upgrade the project systems damaged by the storms that gave additional authority to the USACE to construct the 100-year GNOHSDRRS projects.

The Westwego to Harvey Canal Hurricane Protection Project was authorized by the Water Resources Development Act (WRDA) of 1986 (Public Law (P.L.) 99-662, Section 401(b)). The WRDA of 1996 modified the project and added the Lake Cataouatche Project and the East of Harvey Canal Project (P.L. 104-303, Section 101(a)(17) & P.L. 104-303, 101(b)(11)). The WRDA 1999 combined the three projects into one project under the current name (P.L. 106-53, Section 328).

The Department of Defense, Emergency Supplemental Appropriations to Address Hurricanes in the Gulf of Mexico, and Pandemic Influenza Act of 2006 (3rd Supplemental - P.L. 109-148, Chapter 3, Construction, and Flood Control and Coastal Emergencies) authorized accelerated completion of the project and restoration of project features to design elevations at 100 percent Federal cost. The Emergency Supplemental Appropriations Act for Defense, the Global War on Terror, and Hurricane Recovery of 2006 (4th Supplemental - P.L. 109-234, Title II, Chapter 3, Construction, and Flood Control and Coastal Emergencies) authorizes construction of a 100-year level of protection; the replacement or reinforcement of floodwalls; and the construction of levee armoring at critical locations. Additional Supplemental Appropriations include the U.S. Troop Readiness, Veterans' Care, Katrina Recovery, and Iraq Accountability Appropriations Act, 2007 H.R. 2206 (pg. 41-44) Title IV, Chapter 3, Flood Control and Coastal Emergencies, (5th Supplemental), General Provisions, Sec. 4302.

1.3 PRIOR REPORTS

A number of studies and reports on water resources development in the proposed project area have been prepared by the USACE, other Federal, state, and local agencies, research institutes, and individuals, and are herein incorporated by reference. Pertinent studies, reports and projects are discussed below:

- On 12 June 2008, the CEMVN signed a Decision Record on IER # 15, entitled “Lake Cataouatche Levee, Jefferson Parish, Louisiana.” The proposed action includes constructing a 100-year level of protection in the project area.

- On 30 May 2008, the CEMVN signed a Decision Record on IER # 22 entitled “Government Furnished Borrow Material, Plaquemines and Jefferson Parishes, Louisiana.” The document was prepared to evaluate the potential impacts associated with the actions taken by the USACE as a result of excavating borrow areas for use in construction of the GNOSDRRS.

- On 6 May 2008, the CEMVN signed a Decision Record on IER # 23 entitled "Pre-Approved Contractor Furnished Borrow Material # 2, St. Bernard, St. Charles, Plaquemines Parishes, Louisiana, and Hancock County, Mississippi." The document was prepared to evaluate the potential impacts associated with the actions taken by commercial contractors as a result of excavating borrow areas for use in construction of the GNOSDRRS.

- On 14 March 2008, the CEMVN signed a Decision Record on IER # 11 (Tier 1) entitled "Improved Protection on the Inner Harbor Navigation Canal, Orleans and St. Bernard Parishes, Louisiana." The document was prepared to evaluate potential impacts associated with building navigable and structural barriers to prevent storm surge from entering the Inner Harbor Navigation Canal from Lake Pontchartrain and/or the Gulf Intracoastal Waterway-Mississippi River Gulf Outlet-Lake Borgne complex. Two Tier 2 documents discussing alignment alternatives and designs of the navigable and structural barriers, and the impacts associated with exact footprints, are being completed.

- On 21 February 2008, the CEMVN signed a Decision Record on IER # 18 entitled "Government Furnished Borrow Material, Jefferson, Orleans, Plaquemines, St. Charles, and St. Bernard Parishes, Louisiana." The document was prepared to evaluate the potential impacts associated with the actions taken by the USACE as a result of excavating borrow areas for use in construction of the GNOHSDRRS.

- On 14 February 2008, the CEMVN signed a Decision Record on IER # 19 titled "Pre-Approved Contractor Furnished Borrow Material, Jefferson, Orleans, St. Bernard, Iberville, and Plaquemines Parishes, Louisiana, and Hancock County, Mississippi." The document was prepared to evaluate the potential impacts associated with the actions taken by commercial contractors as a result of excavating borrow areas for use in construction of the GNOHSDRRS.

- On 19 June 2007, the CEMVN signed a Finding of No Significant Impact (FONSI) on EA # 439 – Westwego to Harvey Canal, Highway (Hwy) 45 Borrow Pits: The CEMVN prepared EA # 439 as an after-the-fact environmental impact analysis to disclose, assess, and mitigate the environmental impacts caused by the excavation of six borrow pits during 1999 and 2001, respectively. This EA retroactively identified the environmental impacts that occurred where the six pits were actually excavated and proposed after-the-fact mitigation.

- In July 2006, the CEMVN signed a FONSI on EA # 433 entitled "USACE Responses to Hurricanes Katrina & Rita in Louisiana." The document was prepared to evaluate the potential impacts associated with the actions taken by the USACE as a result of Hurricanes Katrina and Rita.

- On 30 August 2000, the CEMVN signed a FONSI on EA # 320 entitled "West Bank Hurricane Protection Features." The report evaluated the impacts associated with borrow sources and construction options to complete the Westwego to Harvey Canal Hurricane Protection Project.

- In December 1996, the USACE completed a post-authorization change study entitled, "Westwego to Harvey Canal, Louisiana Hurricane Protection Project Lake Cataouatche Area, EIS." The study investigated the feasibility of providing hurricane surge protection to that portion of the west bank of the Mississippi River in Jefferson Parish between Bayou Segnette and the St. Charles Parish line. A Standard Project Hurricane (SPH) level of protection was recommended along the alignment followed by the existing non-Federal levee. The project was authorized by Section 101(b) of the WRDA of 1996, P.L. 104-303, subject to the

completion of a final report of the Chief of Engineers, which was signed on 23 December 1996.

- On 12 January 1994, the CEMVN signed a FONSI on EA # 198 entitled, "West Bank of the Mississippi River in the Vicinity of New Orleans, LA, Hurricane Protection Project, Westwego to Harvey Canal, Jefferson Parish, LA, Proposed Alternate Borrow Sources and Construction Options." The report evaluates the impacts associated with borrow sources and construction options to complete the Westwego to Harvey Canal Hurricane Protection Levee.

- On 20 March 1992, the CEMVN signed a FONSI on EA # 165 entitled "Westwego to Harvey Canal Disposal Site" prepared to evaluate the environmental impacts associated with the disposal site to stockpile excavated materials near the existing V-line levee, Estelle Pumping Station, Jefferson Parish.

- On 3 June 1991, the CEMVN signed a FONSI on EA # 136 entitled "West Bank Additional Borrow Site between Hwy 45 and Estelle PS" prepared to evaluate the impacts associated with design changes to the Westwego to Harvey Canal Hurricane Protection Project since EA # 121.

- On 15 March 1990, CEMVN signed a FONSI on EA # 121 entitled "West Bank Westwego to Harvey Changes to EIS." The report addressed the impacts associated with the use of borrow material from Fort Jackson for LPV construction. The material was used for constructing the second lift for the Plaquemines West Bank levee upgrade, as part of LPV construction.

- In December 1986, the USACE completed a Feasibility Report and EIS entitled, "West Bank of the Mississippi River in the Vicinity of New Orleans, LA." The report investigated the feasibility of providing hurricane surge protection to that portion of the west bank of the Mississippi River in Jefferson Parish between the Harvey Canal and Westwego, and down to the vicinity of Crown Point, Louisiana. The report recommended implementing a plan that would provide SPH level of protection to an area on the west bank between Westwego and the Harvey Canal north of Crown Point. The project was authorized by the WRDA of 1986 (P.L. 99-662). Construction of the project was initiated in early 1991.

1.4 INTEGRATION WITH OTHER INDIVIDUAL ENVIRONMENTAL REPORTS

In addition to this IER, the CEMVN is preparing a draft Comprehensive Environmental Document (CED) that will describe the work completed and remaining to be constructed. The purpose of the draft CED is to document the work completed by the CEMVN on a system-wide scale. The draft CED will describe the integration of individual IERs into a systematic planning effort. Overall cumulative impacts and future operations and maintenance requirements will also be included. Additionally, the draft CED will contain updated information for any IER that had incomplete or unavailable data at the time it was posted for public review.

The draft CED will be made available for a 60-day public review period. The document will be posted on www.nolaenvironmental.gov, or can be requested by contacting the CEMVN. A notice of availability will be mailed/e-mailed to interested parties advising them of the availability of the draft CED for review. Additionally, a notice of availability will be placed in national and local newspapers. Upon completion of the 60-day review period, all comments will be compiled and appropriately addressed. Upon resolution of any comments received, a final CED will be prepared, signed by the District Commander, and made available to any stakeholders requesting a copy.

Compensatory mitigation for unavoidable impacts associated with this and other proposed GNOHSDRRS projects will be documented in forthcoming mitigations IERs, which are being written concurrently with all other IERs.

1.5 PUBLIC CONCERNS

The foremost public concern is reducing risk of hurricane, storm, and flood damage for businesses and residences, and enhancing public safety during major storm events in WBV and Jefferson Parish. In addition to these concerns, impacts from activities associated with the construction of the levee system to the 100-year level of protection to cultural and historical resources such as Jean Lafitte National Historical Park and Preserve-Barataria Preserve Unit (JLNHPP) and the Bayou aux Carpes wetland area are of significant interest to the public. These resources are often associated with an intangible value and the public would like impacts to these resources minimized as much as possible. During the public meetings held by the CEMVN in the WBV area, the communities voiced concerns over impacts to the coastal regions and wetlands due to future storm and flood events and whether adequate measures would be taken by the agencies to address them.

1.6 DATA GAPS AND UNCERTAINTIES

CEMVN has not completed identification of the source for levee material (i.e., borrow areas) to be used on the IER # 14 segment of the line of protection. In IERs # 25 and # 26, the CEMVN is examining issues associated with the identification of acceptable borrow materials. Additionally, in IER # 24 the CEMVN is examining issues associated with areas for stockpiling borrow material.

Large quantities of other construction materials (e.g., concrete, sheet pile, and riprap) would be delivered to the project area, as well as to other ongoing 100-year level of protection projects in the New Orleans Metropolitan Statistical Area (MSA). The sources for these materials and the transportation routes for delivering them have not been completely determined. Transportation of all materials to construction sites could have localized short-term impacts to transportation corridors that cannot be quantified at this time.

In addition, design reports for the reaches covered in IER # 14 are currently in preparation. As such, this analysis has been performed prior to final design and is based on concept level design and reasonable assumptions regarding the proposed actions. While the alternatives described in this evaluation are preliminary, the basic function of their features and the footprint for their construction should remain substantially the same as the project progresses through actual design. Estimates of materials necessary to construct the project were developed from best professional judgment and design reports completed for similar levee and floodwall alignments nearby. As such, the alternative features and associated numbers developed were used to quantify the magnitude of the proposed actions and not to prescribe detailed materials, quantities, or design specifications. This information has been utilized for this study to the greatest extent possible. Comprehensive project costs have not yet been determined.

The estimated environmental impacts have been developed to create an envelope of effects within which design may proceed without compromising the integrity of the assessment. As such, the description of the features does not represent any formal commitment to final design, equipment for use, vendors for supply of materials, or methods of construction, but gives an approximation of how the features could be constructed and the associated impacts thereof.

Only limited data is available for the project area's post-Hurricane Katrina socioeconomic status. The recovery effort is on-going and the status of jobs, economic growth, housing, education and business success are rapidly changing. The information that exists is vague in nature and does not address the resources in detail. Any additional environmental justice data relating to the IER # 14 project area will be incorporated into the CED.

The exact start and end dates of construction for the project study area are unknown at the time of development of this report.

2.0 ALTERNATIVES

2.1 ALTERNATIVES DEVELOPMENT AND PRELIMINARY SCREENING CRITERIA

NEPA requires that, in analyzing alternatives to a proposed action, a Federal agency consider an alternative of "No Action." Likewise, Section 73 of the WRDA of 1974 (P.L. 93-251) requires Federal agencies to give consideration to "non-structural measures" to reduce or prevent flood damage. The CEMVN Project Delivery Team (PDT) considered a no action alternative and non-structural measures in this IER, discussed in sections 2.4 and 2.5.3, respectively.

In addition to these mandated alternatives, a range of reasonable alternatives were formulated through input by the CEMVN PDT, Value Engineering (VE) Team, engineering and design consultants, as well as local government, the public and resource agencies for each of the reaches described in this IER. The "action" alternatives formulated are comprised of alternative alignments for each flood protection corridor. Within each of these alignment alternatives, several scales were considered to encompass various flood protection design alternatives which could be utilized within that alignment.

The following standard set of alignment alternatives and scales within these alignments were initially considered for each reach:

Alternatives:

- Existing alignment with straddle (toe-to-toe growth occurs equally on the protected and flood sides of the levee)
- Flood-side shift (all toe-to-toe growth occurs on flood side of levee)
- Protected-side shift (all toe-to-toe growth occurs on protected side of levee)

Alternative Scales:

- Earthen Levee Enlargement
- Floodwall
- Earthen Levee with Floodwall cap
- Earthen Levee using Deep Soil Mixing
- Earthen Levee using Geotextile Fabric

In addition to this standard set of action alternatives common to all reaches, other alternatives were formulated to address reach-specific opportunities and constraints, all of which are described in detail in the following section. Once a full range of alternatives was established for each reach, a preliminary screening was conducted to identify alternatives which would proceed through further analysis. The criteria used to make this determination included engineering effectiveness, economic efficiency, and environmental and social acceptability. Those

alternatives which did not adequately meet these criteria were considered unfeasible and therefore were eliminated from further study in this IER.

2.2 DESCRIPTION OF THE ALTERNATIVES

Although it is CEMVN's intent to employ an integrated, comprehensive and systems-based approach to hurricane and storm damage reduction in raising the GNOHSDRRS to the 100-year level of flood protection, each reach has its own range of alternatives. This approach allows for individual reach alternative decisions to be made in a manner cognizant of unique local circumstances. At the same time, the alternatives analysis and selection remain integrated and comprehensive, considering reaches in relation to one another and other past, current, and reasonably foreseeable actions by CEMVN and other entities within the project study area.

As such, the alternatives description that follows is organized by reach, noting those alternatives that are common among all reaches. Each reach is identified by a project identification number (e.g., WBV-14c). The alternative description also states how each alternative relates to the range of alternatives for adjacent reaches, to insure awareness of the GNOHSDRRS as a whole.

2.3 PROPOSED ACTION

The Project Delivery Team evaluated many factors in deciding upon the most feasible method to accomplish the levee system improvements. These factors include criteria such as engineering effectiveness, economic efficiency, and environmental and social acceptability. One significant parameter considered is the utilization of existing right-of-way (ROW) as much as practicable. By incorporating this parameter into the design in the early stages, environmental consequences would be avoided and/or minimized to the greatest extent practicable. The selection of a proposed action alternative for each reach is the result of internal meetings and field investigations to determine the most feasible action, taking into consideration all applicable factors and related parameters.

The proposed action for IER # 14 would increase the elevation of existing levee reaches to meet the 100-year level of protection and replace all existing floodwalls with higher floodwalls for a continuous line of protection. A typical maximum levee footprint is shown in figure 2. All floodwalls would typically be 2 ft wide, supported by a 14 ft wide by 3 ft high concrete slab connected to battered H-piles (figure 9). All elevations are with reference to North American Vertical Datum of 1988, 2004.65 (NAVD 88) datum. The levee system is scheduled to be constructed by June 2011.

The proposed action has been divided into five main reaches for construction: WBV-14c, WBV-14b, WBV-14f, WBV-14d, and WBV-14e. Some reaches include floodwalls for pump station protection, identified as WBV-30, WBV-37, and WBV-43, as listed in Table 1 and labeled in figure 1. Where needed, utilities would be relocated to cross the project in accordance with existing standards. Disruptions to existing facilities would be kept to a minimum.

Typical earthen materials used for levee construction consist of low organic clays with a plasticity index (PI) greater than 15 percent and an organic content between 9 percent and 12 percent, fertilizer, seed, mulch, and water, reinforced high strength geotextile fabric if required, low strength geotextile filter fabric for silt fences, plastic or steel hog wire for safety fences, steel or wood posts for silt and safety fences, crushed stone for surfacing and riprap for wave erosion prevention.

Subsequent to Hurricane Katrina, a need was identified for reinforcing the pumping stations in Jefferson Parish. Jefferson Parish experienced flooding from Hurricane Katrina in many low

lying areas, which appears to have come partially from backflows that occurred at several east bank pumping stations. Backflows occur when pumps are off and high stages on the discharge side force flow through the pumps and into the interior canals. If the discharge stage is above the highest invert of the discharge pipe or tube, but below the top elevation, free flowing backflows can occur. If the stages rise above the top elevation of the discharge pipe, siphonic backflows can occur. The existing floodwalls and levee tie-ins at the three pumping stations within IER # 14 currently do not meet design criteria that would provide protection from a hurricane event of 1 percent exceedence surge elevation, with associated waves. A summary of each reach is listed in Table 1.

Table 1: Summary of Reaches for IER # 14

Reach	Current Elevation (ft)	Future Elevation (ft)	Levee Length (miles)	Floodwall Length* (ft)	Comments
WBV-14c	8-10	14	3.29	485	North Levee
WBV-14b	10-14	14	2.77	576	Orleans Village Pump Station to Hwy 45
WBV-14f	12	14	2.73	757	Hwy 45 to V-Line Levee
WBV-14d	11	14	n/a	7,008	V-Line Levee Floodwall
WBV-14e	10-12	14	1.78	210	V-Line Levee
WBV-30	9.5-13.6	16	n/a	522	Westminster Pump Station
WBV-37	16.9	16	n/a	475	Ames Pump Station
WBV-43	15.8	16	n/a	729	Mount Kennedy Pump Station

* These lengths pertain to existing floodwalls at utility crossings. Dimensions for new floodwalls may vary slightly.

2.3.1 WBV-14c (North Levee)

Reach WBV-14c extends from its western end at the Westwego Pump Station # 2 to the abandoned Orleans Village Pump Station (figure 3). The existing elevation of the earthen levee ranges between 8 ft and 10 ft NAVD 88. This reach includes the Westminster Pump Station (WBV-30) with a 522-ft long concrete floodwall. The Commercial Investment Trust (CIT) Tract is partially located on the flood side of this reach. The CIT Tract consists of wetlands adjacent to Bayou Segnette, owned by the Federal government as the result of a lawsuit settled in 1994. The reach is surrounded by a canal on the protected side and bottomland hardwood forests and swamps on the flood side. The bottomland hardwood forests begin at the Westwego Pump Station # 2 where they transition to cypress-tupelo swamps at the CIT Tract.

The proposed action consists of the construction of an earthen levee enlargement with a protected side shift within the existing ROW. The levee would span a distance of 3.29 miles, built to an elevation of 14 ft NAVD 88. Fronting protection would be built at the Westminster Pumping Station and other floodwalls would be constructed at the utility crossings within this reach. The floodwalls at the utility crossings total 485 ft, and would tie-in to the earthen levees on either end.

The majority of levee construction work would occur on the protected side of the levee, and stability berm work may occur on the flood side. All construction occurs within the existing ROW. The levee work may require geotextile fabric and/or deep soil mixing to strengthen the levee foundation. The deep soil mixing method involves the blending of a binder such as lime, cement, slag, and fly ash into the soil through a hollow stem auger and mixing tool arrangement to produce round "columns" of treated soil. Applications for this method include stability and support, seepage cutoff, and seismic retrofit. This method has proven to be a viable method to effectively improve the competency of soils in Southeast Louisiana (Woodward 2007). Strengthening of the foundation can also be achieved by installing geotextile fabric in the foundation of the levee.

The Westminster Pumping Station (WBV-30) discharges in the vicinity of the Grand Cross Canal. This pumping station has four 72-inch, 300 cfs vertical pumps. Water passes through steel discharge tubes and empties into a discharge basin. The Westminster Pumping Station walls were constructed to elevations ranging from 9.5 to 13.60 ft NAVD 88. Although some heights of protection appear adequate, the walls are both geotechnically and structurally deficient when analyzed with respect to the new design criteria.

The proposed action for WBV-30 includes the construction of a continuous line of flood protection within the existing ROW, which would tie-in to the existing levees on either side, with limited effects on the existing pumping station. This protection would incorporate the use of pile-founded reinforced concrete floodwalls, constructed to an elevation of 16 ft NAVD 88 across the pump station discharge basin, and 14 ft NAVD 88 at the levee tie-in points. The additional wall height of 2 ft (from 14 to 16 ft) included for the walls within the pump station discharge basin is referred to as "structural superiority." Structural superiority is defined as the construction of a floodwall higher than recommended engineering standards, due to the major disruption in constructing around the existing pump station and providing future maintenance.

Table 2 and table 3 show the estimated quantities and the duration of construction activity for the levees in this reach and the Westminster Pump Station floodwall. The duration estimates are based on a 60-hour work week.

Table 2: Estimates of Major Construction Quantities for Levees in Reach WBV-14c

Material	Quantity*	Unit
Levee- Compacted Fill	395,320	Embankment Cubic Yards (in place)
Estimated Construction Duration (including adverse weather days)	426	Calendar Days

*Quantities are strictly estimates. Source: USACE, Cost Engineering Team

Table 3: Estimates of Major Construction Quantities for Reach WBV-30

Material	Quantity*	Unit
Concrete	3,697	Cubic Yards
Sheet Pile	26,390	Square Feet
Pipe Piles	43,574	Vertical Linear Feet
Levee- Compacted Fill	8,750	Embankment Cubic Yards (in place)
Deep Soil Mixing	243,250	Vertical Linear Feet
Estimated Construction Duration (including adverse weather days)	808	Calendar Days

*Quantities are strictly estimates. Source: USACE, Cost Engineering Team

2.3.2 WBV-14b (Orleans Village Pump Station to Highway 45)

Reach WBV-14b extends from the abandoned Orleans Village Pump Station to Hwy 45 (figure 4). The existing elevation of the earthen levee ranges between 10 ft and 14 ft NAVD 88. The reach includes Ames Pump Station (WBV-37) and Mount Kennedy Pump Station (WBV-43), with 475 ft and 729 ft long concrete floodwalls, respectively. The reach is surrounded by a canal and residential structures on the protected side, and by cypress-tupelo swamps and borrow pits on the flood side. The six borrow pits adjacent to the levee were excavated in 1999 and 2001, totaling approximately 110 acres. EA # 439 described the six borrow pits in detail and evaluated the impacts. The abandoned Oak Cove Pump Station is also located within this reach.

Photo 1. View of Mount Kennedy Pumping Station.

The proposed action consists of the construction of an earthen levee enlargement with a flood side shift within the existing ROW. The levee would span a distance of 2.77 miles, built to an elevation of 14 ft NAVD 88. The existing borrow pits along the flood side of the existing levee may need to be partially or fully filled to support the levee enlargement project. Fronting protection would be built at the Ames and Mount Kennedy Pump Stations and other floodwalls would be constructed at the utility crossings within this reach. The floodwalls at the utility crossings total 576 ft, and would tie-in to the earthen levees on either end.

The majority of levee construction work would occur on the flood side of the levee, and stability berm work may occur on the protected side. All levee construction occurs within the existing

ROW. The levee work may require geotextile fabric and/or deep soil mixing to strengthen the levee foundation.

The Ames Pumping Station (WBV-37) discharges into the Millaudon Canal. This pumping station has two 84-inch, 300 cfs vertical pumps, four 72-inch, 300 cfs vertical pumps, and one 132-inch, 1,050 cfs horizontal pump. Water passes through steel discharge tubes and empties into a discharge basin. The Ames Pumping Station walls were constructed to an elevation of 16.9 ft NAVD 88. Although some heights of protection appear adequate, the walls are both geotechnically and structurally deficient when analyzed with respect to the new design criteria.

The proposed action for WBV-37 includes the construction of a continuous line of flood protection within the existing ROW, which would tie-in to the existing levees on either side, with limited effects on the existing pumping station. This protection would incorporate use of pile-founded reinforced concrete floodwalls/sluice gate structure, constructed to an elevation of 16.0 ft NAVD 88 across the pump station discharge basin, and 14 ft NAVD 88 at the levee tie-in points. Structural superiority of 2 ft is included in the wall height within the pump station discharge basin.

The Mount Kennedy Pumping Station (WBV-43) also discharges into the Millaudon Canal. This pumping station has three 48-inch, 500 cfs vertical pumps. Water passes through steel discharge tubes and empties into a discharge basin. The Mount Kennedy Pumping Station walls were constructed to an elevation of 15.80 ft NAVD 88 in front of the station and at an approximate elevation of 15.80 ft NAVD 88 at the tie-in walls. Although some heights of protection appear adequate, the walls are both geotechnically and structurally deficient when analyzed with respect to the new design criteria.

The proposed action for WBV-43 includes the construction of a continuous line of flood protection, partially outside of the existing ROW, which would tie-in to the existing levees on either side, with limited effects on the existing pumping station. Permanent additional ROW would be required on both the flood side and protected side of the project to implement the improvements. The current plan shows a range of 40 ft to 50 ft of additional permanent ROW that would be required along the length of the protected side of the project. On the flood side of the project, a range of 10 ft to 20 ft of additional permanent ROW would be required on the south side of Millaudon Canal.

The proposed action would incorporate the use of pile-founded reinforced concrete floodwalls, constructed to an elevation of 16 ft NAVD 88 across the pump station discharge basin, and 16 ft NAVD 88 at the levee tie-in points. Structural superiority of 2 ft is included in the wall height within the pump station discharge basin.

Table 4, table 5, and table 6 show the estimated quantities and the duration of construction activity for the levees in this reach and the Ames and Mount Kennedy Pump Station floodwalls. The duration estimates are based on a 60-hour work week.

Table 4: Estimates of Major Construction Quantities for Levees in Reach WBV-14b

Material	Quantity*	Units
Levee- Compacted Fill	180,210	Embankment Cubic Yards (in place)
Estimated Construction Duration (including adverse weather days)	301	Calendar Days

*Quantities are strictly estimates. Source: USACE, Cost Engineering Team

Table 5: Estimates of Major Construction Quantities for Reach WBV-37

Material	Quantity*	Unit
Concrete	2,614	Cubic Yards
Sheet Pile	9,611	Square Feet
H-Piles	26,717	Vertical Linear Feet
Levee- Compacted Fill	1,563	Embankment Cubic Yards (in place)
Estimated Construction Duration (including adverse weather days)	693	Calendar Days

*Quantities are strictly estimates. Source: USACE, Cost Engineering Team

Table 6: Estimates of Major Construction Quantities for Reach WBV-43

Material	Quantity*	Unit
Concrete	3,245	Cubic Yards
Sheet Pile	20,660	Square Feet
H-Pile	81,614	Vertical Linear Feet
Estimated Construction Duration (including adverse weather days)	808	Calendar Days

*Quantities are strictly estimates. Source: USACE, Cost Engineering Team

2.3.3 WBV-14f (Highway 45 to V-Line Levee Floodwall)

Reach WBV-14f extends from Highway 45 to the V-line levee floodwall (figure 5). The existing elevation of the earthen levee is 12 ft NAVD 88. The reach is surrounded by a canal on the protected side and bottomland hardwood forests on the flood side. The ROW on the flood side includes 25 acres of existing borrow pits that were addressed in EA # 198.

The proposed action consists of the construction of an earthen levee enlargement with a flood side shift within the existing ROW. The levee would span a distance of 2.73 miles, built to an elevation of 14 ft NAVD 88. The existing borrow pits along the flood side of the existing levee may need to be partially or fully filled to support the levee enlargement project. The floodwalls at the utility crossings total 757 ft, and would tie-in to the earthen levees on either end.

The majority of levee construction work would occur on the flood side of the levee, and stability berm work may occur on the protected side. All levee construction occurs within the existing ROW. The levee work may require geotextile fabric and/or deep soil mixing to strengthen the levee foundation.

Table 7 shows the estimated quantities and the duration of construction activity for this reach. The duration estimates are based on a 60-hour work week.

Table 7: Estimates of Major Construction Quantities for Reach WBV-14f

Material	Quantity*	Units
Levee- Compacted Fill	112,000	Embankment Cubic Yards (in place)
Estimated Construction Duration (including adverse weather days)	270	Calendar Days

*Quantities are strictly estimates. Source: USACE, Cost Engineering Team

Photo 2. Levee in WBV-14f showing its proximity to residences.

2.3.4 WBV-14d (V-Line Levee Floodwall)

Reach WBV-14d extends between Highway (Hwy) 45 and Hwy 3134 (Lafitte-Larose Hwy) and includes protection across Hwy 45 and the elevated Hwy 3134 (figure 6). The reach, comprising only a floodwall along the V-line levee, has an existing elevation of 11 ft NAVD 88. The JLNHPP is located on the flood side of this reach, and bottomland hardwood forests and a canal is located on the protected side.

The proposed action consists of replacing the existing sheet pile floodwall with a concrete floodwall within the existing ROW. The floodwall would span a distance of 7,008 ft, built to an elevation of 14 ft NAVD 88. As part of the proposed action, the floodgate at Hwy 45 would also be replaced with a swing gate. The existing ramp at Hwy 3134 would be raised to ensure a continuous line of protection in the levee and floodwall system (see figure 10). The new floodwall would be constructed so that it does not encroach upon JLNHPP.

Table 8 shows the estimated quantities and the duration of construction activity for this reach. The duration estimates are based on a 60-hour work week.

Table 8: Estimates of Major Construction Quantities for Reach WBV-14d

Material	Quantity*	Units
Concrete	12,000	Cubic Yards
Sheet Pile	365,000	Square Feet
14" Pre-stressed Concrete Pile	140,000	Linear Feet
Estimated Construction Duration (including adverse weather days)	974	Calendar Days

*Quantities are strictly estimates. Source: USACE, Cost Engineering Team

2.3.5 WBV-14e (V-Line Levee)

Reach WBV-14e extends from Hwy 3134 to its terminus on the eastern end of the V-line levee (figure 7). The existing elevation of the earthen levee ranges between 10 ft and 12 ft NAVD 88. This reach includes a 200 ft wide by 15 ft deep interior drainage canal on the protected side and the Bayou aux Carpes wetland area on the flood side.

The proposed action consists of the construction of an earthen levee enlargement with a protected side shift, partially outside the existing ROW. The levee would span a distance of 1.78 miles, built to an elevation of 14 ft NAVD 88. An additional 1,500 ft of ROW would be required between Hwy 3134 and the vertex of the "V" to allow the highway to be raised between the two reaches (figure 10). The existing culverts under Hwy 3134 would be replaced to accommodate construction of the levee section and the elevated highway. These culverts would be designed to accommodate animal passage. An additional 200 ft of ROW would be required on the protected side from the vertex of the "V" to the eastern terminus to facilitate canal relocation for the levee enlargement. About 210 ft of floodwalls would be required to tie-in the levee to the elevated Hwy 3134, providing a continuous line of protection.

All of the construction work would occur on the protected side of the levee, partially outside of the existing ROW. Permanent additional ROW would be required to implement the construction work. The levee work may require geotextile fabric and/or deep soil mixing to strengthen the levee foundation.

Table 9 shows the estimated quantities and the duration of construction activity for this reach. The duration estimates are based on a 60-hour work week.

Table 9: Estimates of Major Quantities for Construction of Reach WBV-14e

Material	Quantity*	Units
Levee- Compacted Fill	5,093,871	Embankment Cubic Yards (in place)
Estimated Construction Duration (including adverse weather days)	244.00	Calendar Days

*Quantities are strictly estimates. Source: USACE, Cost Engineering Team

2.3.6 Actions Common to All Reaches

2.3.6.1 Armoring

Armoring may be provided at specific locations throughout the GNOHSDRRS. Armoring may be used to protect against erosion and scour on the protected side of selected critical portions of levees and floodwalls in the GNOHSDRRS. These critical areas include: transition points

(where levees and floodwalls transition into any hardened feature such as other levees, floodwalls, pump stations, etc.), utility pipeline crossings, floodwall protected side slopes, and earthen levees that are exposed to wave and surge overtopping during a 500-year hurricane storm event. Specific locations have not been fully identified.

There are five proposed methods of armoring that could be used at the critical locations:

1. ACB - Articulated concrete blocks;
2. ACB/TRM – Articulated concrete blocks/Turf reinforcement mattress: The physical conditions or hydraulic parameters are such that small modifications could allow a reduction to a TRM;
3. TRM – Turf reinforcement mattress;
4. TRM/Grass – Turf reinforcement mattress/Grass: The physical conditions or hydraulic parameters are such that small modifications could allow a reduction to a surface with good grass cover only;
5. Good grass cover.

2.3.6.2 Relocations

Where needed, utilities would be relocated to cross the project in accordance with existing standards. Disruptions to existing facilities would be kept to a minimum.

2.3.6.3 Operations and Maintenance

In addition to the activities necessary to construct these features, the proposed action includes all routine maintenance (e.g., mowing, inspections, re-paving, repairs to structures, in-kind replacements) for both the local sponsor operations and maintenance (O&M) and USACE-related activities necessary to maintain the safety or integrity of the GNOHSDRRS.

O&M of the GNOHSDRRS would have minimal impact on the significant resources of the area. The levees would be mowed periodically and herbicides may be used on a very limited basis around control structures. The floodwall and levees would be subject to annual inspection and repair, as necessary, up to and including in-kind replacement as well as adding subsequent lifts of earthen material to levees to address subsidence and sea level rise. Activities would be conducted within the existing ROW and would be within previously disturbed areas. Temporary and localized construction-related effects (e.g., noise, emissions-air quality, temporary increase in traffic, etc.) would occur during operations and maintenance work.

2.3.6.4 Temporary Flood Protection Contractually Required During Construction

As part of the construction process, temporary flood protection would be required whenever a reach of the existing floodwall or levee is removed until the replacement floodwall or levee was sufficiently completed to withstand floodwaters. Sufficiently completed is defined as the time when the concrete in the replacement floodwall reaches a compressive strength of 4,000 psi and all earthwork for the floodwall/levee replacement has been completed. Typically, the contractor would provide temporary protection or a cofferdam that would in no way affect the stability of the existing flood protection or flood protection being constructed. The contractor would maintain all temporary flood control, including maintaining and operating drainage facilities, during the required time. The contractor would provide, maintain, and operate pumps of adequate capacities, for the removal of the water that could accumulate in excavations within the area protected by the temporary flood protection, during construction. The discharge from the pumps would be into the flood side. The contractor would remove all temporary flood control structures and incidental features when no longer required. All materials used in providing

temporary flood control structures and any debris generated during their removal would become the property of the contractor and would be removed from the job site prior to completion.

Prior to beginning work, the contractor would submit for approval their proposed plan to accomplish the specified temporary flood protection. The submittal would be in accordance with Section 01330, "Submittal Procedures" and would include, but not necessarily be limited to the following:

1. Design and layout of temporary flood protection works,
2. Methods and duration of maintenance of temporary flood protection,
3. Methods, sequence, equipment, and materials to be used for drainage of excavations for floodwall demolition and floodwall replacement, and
4. Method and sequence of removal, including disposal of materials.

These measures provide assurance that protection would be maintained during the construction process even in the event of significant flooding.

2.4 ALTERNATIVES TO THE PROPOSED ACTION

The only alternative to be considered in detail, other than the proposed action for all reaches is the no action alternative.

2.4.1 WBV-14c (North Levee)

2.4.1.1 No Action

Under the no action alternative, the proposed action would not be constructed by CEMVN. The levee would be maintained at the existing authorized level and would not provide the 100-year level of protection. No further construction or modifications to the protection system would occur as a result of the no action alternative; however, maintenance of existing structures would continue.

2.4.2 WBV-14b (Orleans Village Pump Station to Highway 45)

2.4.2.1 No Action

Under the no action alternative, the proposed action would not be constructed by CEMVN. The levee would be maintained at the existing authorized level and would not provide the 100-year level of protection. No further construction or modifications to the protection system would occur as a result of the no action alternative; however, maintenance of existing structures would continue.

2.4.3 WBV-14f (Highway 45 to V-Line Levee Floodwall)

2.4.3.1 No Action

Under the no action alternative, the proposed action would not be constructed by CEMVN. The levee would be maintained at the existing authorized level and would not provide the 100-year level of protection. No further construction or modifications to the protection system would occur as a result of the no action alternative; however, maintenance of existing structures would continue.

2.4.4 WBV-14d (V-Line Levee Floodwall)

2.4.4.1 No Action

Under the no action alternative, the proposed action would not be constructed by CEMVN. The existing floodwall would be maintained at the existing authorized level and would not provide the 100-year level of protection. No further construction or modifications to the floodwall system would occur as a result of the no action alternative; however, maintenance of existing structures would continue.

2.4.5 WBV-14e (V-Line Levee)

2.4.5.1 No Action

Under the no action alternative, the proposed action would not be constructed by CEMVN. The levee would be maintained at the existing authorized level and would not provide the 100-year level of protection. No further construction or modifications to the protection system would occur as a result of the no action alternative; however, maintenance of existing structures would continue.

2.5 ALTERNATIVES ELIMINATED FROM FURTHER CONSIDERATION

2.5.1 Hollow Core Levees

The concept of the hollow concrete levee system is such that the section fills with water from the bottom as the storm surge rises. The combined weight of the concrete frame and its water-filled voids inside the frame result in a gravity structure that is designed to resist hydrostatic forces and impact forces from vessel collision.

The hollow concrete levees are comprised of trapezoidal shapes similar to that of earthen levees. The levee superstructure sections are comprised of sloped side walls with a flat bottom slab with access to the interior via steel grating or manholes in the crest. Water inlets or ports are incorporated into the cross section near the levee base on the flood side to allow the section to flood with water to contribute to the overall weight for stability purposes. Shear keys in the base were designed to protect against sliding under design loading conditions. The substructure consists of a concrete base slab or pad that would be supported by steel pipe piles. It is anticipated that excavation and granular backfill would be required to construct the pile supported concrete pad. The concrete base slab serves a two-fold purpose. It distributes loads to the pile foundations, as well as serves as a “roadway” for cast-in-place construction. A typical section is shown in the sketch on the next page.

The concrete levee section would not be advantageous to use in lieu of a traditional reinforced levee section. The existing levees within IER # 14 are only deficient by a few feet. Therefore, degrading an existing levee and replacing it with a concrete levee section would not be cost effective.

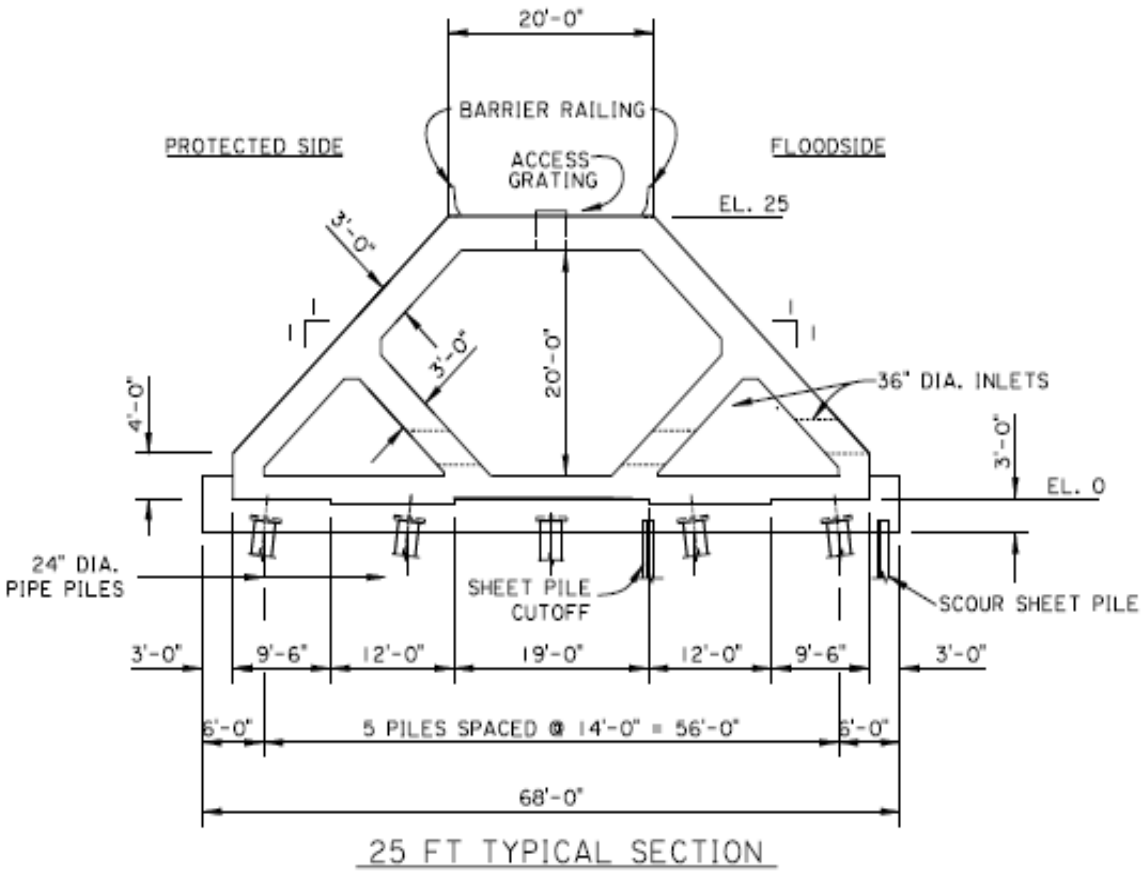

Photo 3. Hollow Core Levee Cross-Section View

2.5.2 Options including a Protected Side Shift, Flood Side Shift, Straddle Levee Expansion, Floodwall for Entire Levee Reach, and Levee for Existing Floodwall

CEMVN considered replacing the entire earthen levee with a floodwall. However, construction costs since Hurricane Katrina have increased considerably (Gulf Coast Reconstruction Bulletin 2006) and it would not be feasible to construct approximately 11 miles of floodwall within all five levee reaches, particularly when other less costly alternatives are available and practicable. Only reach WBV-14d consists entirely of a floodwall. Replacing this floodwall with an earthen levee is eliminated from further consideration due to the increase in the footprint of the structure that would need additional ROW and cause significant impacts on the nearby wetlands and wildlife habitat in JLNHPP.

Where the project area consists of existing earthen levee, generally the most favorable alternative to minimize environmental and social impacts for all five reaches would be the protected side shift within existing ROW. CEMVN initially considered a flood side shift, protected side shift, and straddle levee expansion, both within and outside of existing ROW, for each reach.

The discussion below demonstrates which alternatives were eliminated because of failure to meet the screening criterion of engineering effectiveness, economic efficiency, and environmental and social acceptability.

2.5.2.1 WBV-14c

In this reach a protected side shift is possible within existing ROW. Because this is the most favorable alternative, any options outside of existing ROW or involving a flood side shift (including a straddle levee expansion) are removed from further consideration because they fail to meet the screening criterion of environmental and social acceptability. Thus, a protected side shift within existing ROW is the only action alternative considered.

2.5.2.2 WBV-14b

In this reach sufficient ROW is not available for a protected side shift. CEMVN eliminated a protected side shift and straddle levee expansion from further consideration because these alternatives did not meet the screening criterion. Also, alternatives outside the existing ROW on the flood side were eliminated from further consideration because of environmental impacts. Thus, a flood side shift within existing ROW is the only action alternative considered.

2.5.2.3 WBV-14f

In this reach sufficient ROW is not available for a protected side shift. CEMVN eliminated a protected side shift and straddle levee expansion from further consideration because these alternatives did not meet the screening criterion. Also, alternatives outside the existing ROW on the flood side were eliminated from further consideration because of environmental impacts. Thus, a flood side shift within existing ROW is the only action alternative considered.

2.5.2.3.1 I-walls and L-walls

The use of I-walls or L-walls would provide no functional advantage over an earthen levee that would have made it a better value alternative. An I-wall is the least preferred alternative from an engineering standpoint. Both I-walls and L-walls within this reach were eliminated due to the engineering effectiveness and economic efficiency criteria.

2.5.2.3.2 Earthen Levee with T-wall and L-wall tie-in

Outside of the utility crossings, the earthen levee, L-wall, and I-wall alternatives are the most cost-effective alternatives over T-walls. A T-wall with an L-wall tie-in is the most engineering effective alternative when utilities are left in place. However, this alternative was eliminated due to the economic efficiency criteria.

2.5.2.4 WBV-14d

In this reach a floodwall already exists and sufficient ROW is available to replace this floodwall with one that meets current engineering criteria. A full levee section would have required the relocation of existing utilities under Hwy 45 and acquisition of new ROW into JLNHPP property. Replacing this floodwall with any alternative scale of an earthen levee is eliminated from further consideration due to the economic efficiency and environmental and social acceptability criteria.

2.5.2.4.1 Area 1. Flood protection structure at Hwy 45

Alternative 1 - Ramp crossing

A ramp crossing was conceptually examined but because of the adverse horizontal curvature required at the location of the flood protection, a complex horizontally and vertically curved alignment would result in a costly relocation of an entrance to a subdivision and the church parking lot on the protected side and require additional ROW on the flood side encroaching into the JLNHPP. Acquisition of national park lands is extremely difficult, time consuming, and would require Congressional approval. A ramp crossing was therefore eliminated due to the economic efficiency and environmental and social acceptability criteria.

2.5.2.4.2 Area 2. Flood protection structure between Hwy 45 and Bayou Des Familles

Alternative 2a – Earthen levee

Due to the limited existing ROW in this reach, concrete flood walls which have smaller footprints are recommended. A full levee section would have required the relocation of existing utilities under Hwy 45 and acquisition of new ROW. This alternative was eliminated due to the economic efficiency criteria.

Alternative 2b – L-Wall

L-walls are deemed to be a viable option with the addition of stability berms within existing ROW to eliminate unbalanced loads. However, the increased cost associated with the required length of the sheet piles will render this option to be less economical than the T-wall alternative.

Alternative 3 – Reinforced earthen levee

This levee requires 4H:1V side slopes on the flood side and 4H:1V slope on the protected side followed by a 40H:1V berm from elevation (El.) 2.0 to El. 1.5, a 3H:1V berm from El. 1.5 to El. -1.1, and a 1V:50H slope from El. -1.1 to El. 12.0. Minimal ROW will be required for the construction of the reinforced levee. This required ROW varies from 90 ft at Sta. 585+40 B/L to 72 ft at Sta. 609+00 B/L through Sta. 642+50 B/L. This alternative was eliminated due to the economic efficiency criteria.

2.5.2.4.3 Area 3. Flood protection structure at Hwy 3134

Alternative 3a – Raised earthen ramp with underground levee

Instead of a clay-capped ramp, an underground levee protected by 6 inches of concrete is considered in this alternative. This alternative was eliminated due to the economic efficiency criteria.

Alternative 3b – A new four-lane bridge structure

A left and right bridge accommodating two lanes in each direction of traffic at 70 miles per hour (mph) can carry the existing traffic with no reduction in capacity and speed. Because of the length of the bridges, this alternative is the most expensive and thus would not meet the economic efficiency criteria.

Alternative 3c – Emergency access bridge with two roller gates.

A 1,122 ft bridge with two 12 ft lanes designed for 45 mph traffic to be located in the medial would provide the shortest bridge structure for an emergency crossing over the floodwall. The gate protection would consist of two roller gates, each with an opening of 37.5 ft and a height of 4.75 ft. Each roller gate would also have a 43.5 ft storage monolith. The bridge would have a 4 ft shoulder on either side. This alternative might be the least disruptive to the existing traffic. However, this alternative was eliminated because it does not adequately provide public storm and hurricane evacuation access.

Alternative 3d – A new two-lane bridge with a roller gate at southbound traffic

This alternative would accommodate the same traffic capacity as in alternative 4b but for half the bridge cost. A roller gate would be provided for southbound traffic with tie-in T-walls below the bridge. The two-lane bridge would replace the northbound travel lanes and provide the emergency access when the roller gate is closed when needed. Having a long bridge to accommodate 70 mph is still costly by comparison to other alternatives. This alternative was eliminated due to economic efficiency and it does not provide adequate public hurricane and storm evacuation access.

2.5.2.5 WBV-14e

In this reach sufficient ROW was not available for either a protected side or flood side shift. Accordingly, all alternatives within existing ROW (protected side shift, flood side shift, and straddle levee expansion) were eliminated from further consideration. A flood side shift within this reach would significantly impact the Bayou Aux Carpes wetland area and was removed from further consideration because of a lack of environmental and social acceptability. Thus, a protected side shift outside of existing ROW is the only action alternative considered.

2.5.3 Non-Structural Flood Protection Alternative

Section 73 of the WRDA of 1974 requires that non-structural alternatives be evaluated in flood damage reduction studies. Non-structural flood damage reduction measures typically include: 1) acquisition of flood-prone structures, 2) floodplain zoning, and 3) floodproofing. The average annual cost of implementing non-structural measures, such as floodproofing by raising individual homes and businesses, exceeded the projected average annual benefits and the amount allocated to this project. Other non-structural measures such as permanent relocation, demolition of inhabited structures, or regulation of floodplain uses are not within the authority of the CEMVN as provided by the 4th Emergency Supplemental Appropriations Act. Additionally, flood warning systems and evacuation plans are already in place for all of Jefferson Parish.

As with the previous alternatives, the criteria used to determine feasibility included engineering effectiveness, economic efficiency, and environmental and social acceptability. The alternatives not meeting the criteria were considered infeasible and therefore were eliminated from detailed consideration in this IER. The screening of non-structural measures is summarized below.

2.5.3.1 Acquisition of Flood-Prone Structures

Permanent evacuation of the floodplain involves acquisition of land and structures by fee purchase or by exercising powers of eminent domain. Following acquisition, all structures and improvements are demolished or relocated. Cost savings in annual flood insurance premiums would also be realized. No new use value would be attributed to the vacated lands. No value would be associated with reduced damages to public property, such as roads and utilities. Minor

reduction in emergency services costs would be gained. No reduction in administrative costs of the National Flood Insurance Program and disaster relief programs would be anticipated.

While environmental benefits of a buyout in the study area initially appear to be attractive, more detailed analyses of the potential benefits cannot support a positive recommendation for an acquisition/relocation plan.

Ecosystem restoration would generate benefits, but it is highly unlikely that these benefits would be sufficient to justify the cost of the relocation of all structures in the floodplain, or the scaled costs of smaller relocation efforts. Establishing Federal, state, or regional significance would be problematic because there are no designated habitats for Federal or state listed species within or near the study area. Regarding the Other Social Effects (OSE) and Regional Economic Development (RED) Accounts, the social and economic impacts resulting from the necessary displacement of residences, businesses, and public buildings, the demolition of an equivalent number of buildings of all types, and the removal of a large tax base would have significant negative effects on the local economy. The plan would also generate significant local controversy, disrupt community cohesion, and place economic burdens on relocated families, relatives, and neighbors.

For the reasons cited previously, it is unlikely that a floodplain buyout plan would meet P&G guidelines (Economic and Environmental Principles and Guidelines for Water and Related Land Resources Implementation Studies). Additionally, the buyout plan would not provide significant offsetting environmental or economic benefits, and would have negative effects on the RED and OSE Accounts. Therefore, acquisition of flood-prone structures was eliminated from consideration as a stand-alone alternative.

2.5.3.2 Floodplain Zoning

Through proper land use regulation, floodplains can be managed to ensure that their use is compatible with the severity of a flood hazard. Several means of regulation are available, including zoning ordinances, subdivision regulations, and building and housing codes. Their purpose is to reduce losses by controlling the future use of floodplain lands. Jefferson Parish already participates in the National Flood Insurance Program (NFIP) and manages floodplain land uses consistent with the program. However, a majority of the buildings in the study area floodplain were built prior to the adoption of NFIP zoning standards and are not subject to current floodplain zoning regulations unless they are substantially improved. Therefore, zoning cannot be considered independently as a long-term mitigation solution for flood damage reduction to existing structures.

2.5.3.3 Floodproofing

Floodproofing reduces flood damages through modifications to structures and relocation of building contents. Floodproofing techniques involve keeping water out of the structure, as well as reducing the effects of inundation. Non-structural adjustments, such as the elevation of structures, can be applied by an individual or as part of a collective action either when flood-prone buildings are under construction or through retrofitting of an existing structure. Floodproofing alone was found to be prohibitively expensive, since a majority of structures would require costly elevation (an average cost of $95 per square foot, (USACE 2007b)). While eliminated as a major element in the formulation of alternative plans, selective floodproofing was retained as a flood damage reduction measure as a part of other comprehensive alternative plans.

Due to the failure to meet at least one of the engineering effectiveness, economic efficiency, and environmental and social acceptability criteria, the aforementioned alternatives were eliminated from further study.

2.6 SUMMARY TABLE

Table 10 provides a summary of the preliminary alternative screening results. In the table, "☑" represents alternatives that have been considered, "☑" represents the proposed action for the reach, "X" represents alternatives that have been eliminated from further study, and "n/a" represents alternatives that are not applicable (i.e., alternatives that were not formulated for this reach).

Table 10: Preliminary Alternative Screening Results

	WBV-14c	**WBV-14b**	**WBV-14f**	**WBV-14d**	**WBV-14e**	**WBV-30**	**WBV-37**	**WBV-43**
Alternative	**North Levee**			**V Line Levees**		**Westminster PS Floodwall**	**Ames PS Floodwall**	**Mt. Kennedy PS Floodwall**
No Action	☑	☑	☑	☑	☑	☑	☑	☑
Non-Structural	X	X	X	X	X	X	X	X
Existing ROW								
Earthen Levee Straddle	☑	☑	☑	X	☑	X	X	X
Floodwall	X	X	X	☑	X	☑	☑	☑
Earthen Levee with Floodwall cap	X	X	X	X	X	X	X	X
Earthen Levee using Deep Soil Mixing	☑	☑	☑	X	X	X	X	X
Earthen Levee using Geotextile Fabric	☑	☑	☑	X	X	X	X	X
Flood-side Shift	X	☑	☑	X	X	X	X	X
Protected-side Shift	☑	X	X	X	☑	X	X	X
Flood-side Shift (Outside ROW)								
Earthen Levee	X	X	X	X	X	X	X	X
Floodwall	X	X	X	X	X	X	X	☑
Earthen Levee with Floodwall cap	X	X	X	X	X	X	X	X
Earthen Levee using Deep Soil Mixing	X	X	X	X	X	X		
Earthen Levee using Geotextile Fabric	X	X	X	X	X	X	X	X
Protected-side Shift (Outside ROW)								
Earthen Levee	X	X	X	X	☑	X	X	X
Floodwall	X	X	X	X	X	X	X	X
Earthen Levee with Floodwall cap	X	X	X	X	X	X	X	X
Earthen Levee using Deep Soil Mixing	X	X	X	X	☑	X	X	X
Earthen Levee using Geotextile Fabric	X	X	X	X	☑	X	X	X

3.0 AFFECTED ENVIRONMENT AND ENVIRONMENTAL CONSEQUENCES

3.1 ENVIRONMENTAL SETTING

The project area lies within Jefferson Parish on the west bank of the Mississippi River. The levee extends from Westwego on the western end to Harvey Canal on the eastern end and is in the vicinity of the Mississippi River to the north; Barataria Bay and the Gulf of Mexico to the south; Harvey Canal to the east; and JLNHPP and Lakes Salvador and Cataouatche to the west. Both Lakes Salvador and Cataouatche are estuaries that connect to the Gulf of Mexico through Barataria Bay. Tidal waters can be carried into the study area through these lakes and through canals in the vicinity.

The physical setting for the study area is comprised of: 1) Physiography, 2) Geology, and 3) Climatology/Hydrology, as described below.

3.1.1 Physiography

The study area is located within the Central Gulf Coastal Plain, specifically, within the deltaic plain of the Mississippi River immediately south of New Orleans in an area of low relief. Dominant physiographic features include the Mississippi River, natural levees, abandoned distributaries, crevasse channels, Lakes Cataouatche and Salvador, and several small bayous and canals that criss-cross the low-lying swamps and marshlands.

The adjacent areas are protected from flooding by the Mississippi River levee system. Storm surges originating in the Gulf of Mexico and Lakes Salvador and Cataouatche can travel across the marsh and through the many natural and man-made channels to threaten homes and businesses in the area with flooding from the west and south. A network of levees that nearly encompass the area protects the area from the tidal and storm surge flooding.

3.1.2 Geology

The project area is located south of the Mississippi River, and east of Lakes Cataouatche and Salvador, in the north-central portion of the Mississippi River deltaic plain. Dominant physiographic features in the vicinity include Lakes Cataouatche and Salvador, Bayou Segnette, Bayou des Familles, and freshwater swamps.

The shallow subsurface beneath, and immediately adjacent to, the protection levee is composed of natural levee, swamp, abandoned course, point bar, interdistributary, and prodelta deposits. Natural levee deposits at the surface and shallow subsurface are associated with Bayou Segnette, an abandoned distributary, and Bayou des Familles, an abandoned course. Natural levee deposits are generally less than 10 ft thick and are composed of medium to stiff, oxidized clays and silt with minor organics. Swamp deposits are found at the surface and in the shallow subsurface and are approximately 20 ft thick. Swamp deposits are composed of soft to medium clays with some silt, peat, and wood. Abandoned course and point bar deposits are found at the southern end of the study area and are associated with Bayou des Familles. These deposits generally consist of sand at the base, grading to clays and silt at the top. These deposits are up to 80 ft thick. Interdistributary deposits approximately 30 ft thick are found beneath swamp deposits. Interdistributary deposits are characterized by very soft to soft clay with silt

strata and shells. Prodelta deposits up to 20 ft thick are located below interdistributary deposits. Prodelta deposits are generally composed of medium clay with minor amounts of silt.

The study site contains Sharkey-Commerce, Barbary and Kenner-Allemands soils. Sharkey-Commerce soils are level, poorly drained and somewhat poorly drained soils that have a clayey or loamy surface layer and clayey subsoil or that are loamy throughout. Barbary soils are level, very poorly drained soils that have a thin mucky surface layer and clayey underlying material in swamps. Kenner-Allemands soils are level, very poorly drained soils that have a moderately thick mucky surface layer and mucky and clayey underlying material and are found in freshwater marshes (US Soil Conservation Service 1981).

Groundwater is artificially lowered within the protection levee by forced drainage and is at or near the surface south of the levee.

Long-term relative subsidence, resulting mainly from compaction of Holocene sediments, is estimated at 0.5 ft per century. Eustatic sea level is predicted to rise an additional 1.3 ft over the next century (IPCC 2001). Therefore, the natural, long-term, relative subsidence rate at the project site is estimated to be 1.8 ft per century. Ground subsidence related to artificial lowering of the water table within the protected area likely exceeds the natural rate of subsidence.

3.1.3 Climatology/Hydrology

3.1.3.1 Climate

This area has a subtropical marine climate. Located in a subtropical latitude, its climate is influenced by the many water surfaces of the lakes, streams, and the Gulf of Mexico. Throughout the year, these water bodies modify the relative humidity and temperature conditions, decreasing the range between the extremes. When southern winds prevail, these effects are increased, imparting the characteristics of a marine climate.

This area has mild winters and hot, humid summers with monthly mean temperature extremes from the low 50s in January to the low 80s in July. Temperature extremes of greater than 100°F and less than 10°F have been recorded within the last 30 years. During the summer, prevailing southerly winds produce conditions favorable for afternoon thundershowers. In the colder seasons, the area is subjected to frontal movements that produce squalls and sudden temperature drops. River fogs are prevalent in the winter and spring when the temperature of the Mississippi River is somewhat colder than the air temperature.

Southeast winds predominate in the spring. The prevailing winds of the fall and winter are from the northeast. Winter storms in the area have produced wind speeds of up to 47 mph. The mid-late summer is often disturbed by tropical storms and hurricanes that produce the highest winds in the area.

The annual average precipitation for New Orleans Audubon Park and New Orleans Algiers station is over 60 inches. Extreme monthly rainfalls exceeding 12 inches are common and averages of 20 inches of rainfall have been recorded in a single month. The maximum 24-hour recorded rainfall in over 50 years of monitoring at Algiers station was over 22 inches.

3.1.3.2 Tropical Storms and Hurricanes

Several hurricanes and tropical storms have previously passed through or near the study area. Some of the major hurricanes are:

- Flossy (1956)
- Ethel (1960)
- Betsy (1965)
- Camille (1969)
- Florence (1988)
- Opal (1995)
- Katrina (2005)
- Rita (2005)

Hurricane Katrina brought torrential rains (10 inches to 12 inches), strong winds that reached 130 miles per hour and tidal flooding to the study area. Wind damage caused by Hurricane Katrina was significant. However, it was the devastating storm surge and subsequent flooding that has made Hurricane Katrina the most costly storm in U.S. history.

3.2 SIGNIFICANT RESOURCES

This section identifies the significant resources located in the vicinity of the proposed action, and describes in detail those resources that would be impacted, directly or indirectly, by the alternatives. Direct impacts are those that are caused by the action taken and occur at the same time and place (40 CFR §1508.8(a)). Indirect impacts are those that are caused by the action and are later in time or further removed in distance, but are still reasonably foreseeable (40 CFR §1508.8(b)). Cumulative impacts are discussed in detail in section 4.

The resources described in this section are those recognized as significant by laws, executive orders, regulations, and other standards of national, state, or regional agencies and organizations; technical or scientific agencies, groups, or individuals; and the general public. Further detail on the significance of each of these resources can be found by contacting CEMVN, or on www.nolaenvironmental.gov, which offers information on the ecological and human value of these resources, as well as the laws and regulations governing each resource. Search for “Significant Resources Background Material” in the website’s digital library for additional information. Table 11 shows those significant resources found within the project area, and notes whether they would be impacted by the proposed action analyzed in this IER.

Table 11: Significant Resources in the Project Study Area

Significant Resources	Impacted	Not Impacted
Bottomland Hardwood Forests	☑	
Cypress-Tupelo Swamps	☑	
Bayou aux Carpes Wetland Area, Section 404(c) Site		☑
Fisheries and Aquatic Habitat	☑	
Wildlife	☑	
Threatened & Endangered Species		☑
Air Quality	☑	
Water Quality	☑	
Cultural Resources		☑
Recreation		☑
Aesthetics		☑

3.2.1 Bottomland Hardwood Forests

3.2.1.1 Existing Conditions

Habitat types in the project vicinity can be classified as forested (swamps and bottomland hardwoods), scrub/shrub (early successional bottomland hardwoods), open water, and highly developed by residential and commercial establishments. The extensive forced-drainage systems (in use for at least 20 years) have altered hydrology and the associated vegetation in all habitat types within the project area. The bottomland hardwood forests in the general project area are contained almost exclusively within the Bayou Des Familles ridge system and associated narrow elevated finger ridges that are surrounded by swamps.

Within reach WBV-14f, a mixture of bottomland hardwoods and cypress-tupelo swamps are located on the flood side of the levee. The tree canopy has sufficient cover for succession to continue from a swamp area to a bottomland hardwood forest, which would contain a few dominant cypress trees. Because the area is in a transitional phase, the impacts were considered to be more closely related to bottomland hardwoods than swamps. The forests within this reach are also adjacent to JLNHPP on the west side. Approximately 45.5 acres of bottomland hardwood forests are located within the project footprint on the flood side of the levee within reach WBV-14f and are considered medium to high value.

Bottomland hardwood forests also exist on the flood side of the levee within reach WBV-14c and on the protected side within reaches WBV-14d and WBV-14e. In reach WBV-14c, bottomland hardwoods would not be impacted with the levee expansion project, as there is sufficient project area without impacting the trees. In reaches WBV-14d and WBV-14e, the forests on the protected side have been degraded over time due to hydrologic alterations. The flood side of reach WBV-14d is a part of JLNHPP, and the flood side of reach WBV-14e is a part of the Bayou aux Carpes wetland area. Approximately 45 acres of bottomland hardwood forests within reaches WBV-14d (0.5 acre) and WBV-14e (44.5 acres) are considered medium to high value.

According to the 1986 EIS, the U.S. Fish and Wildlife Service (USFWS) conducted a study and prepared a Habitat Evaluation Procedure (HEP) report and a Coordination Act Report (CAR) that assessed the Bayou aux Carpes wetland area and the adjacent JLNHPP. These areas are hydrologically connected and both contain bottomland hardwood wetlands (the Bayou aux Carpes site also contains scrub-shrub wetlands and freshwater marshes). The HEP, which was a USFWS standard procedure in 1986, was based on the assumption that vegetative communities have value to wildlife and that positive or negative impacts can be expressed in terms of modification (both quantity and quality) to wildlife habitats. These impacts can be measured and compared.

The results of the 1986 HEP analysis indicated that the bottomland hardwood forests and wooded swamps of the Bayou aux Carpes site and the JLNHPP, as well as the scrub-shrub wetlands and freshwater marshes of the Bayou aux Carpes site, are high value habitat for the evaluated species, with the exception of the muskrat. The HEP analysis determined that the site is of moderate value for the habitat requirements of the muskrat.

The USFWS field studies, conducted in March 1986, determined that the site provides valuable habitat for a diversity of wildlife species. The marshlands and forested wetlands within the project vicinity provide feeding, resting, nesting, and escape habitat to numerous species of game and non-game mammals and commercially important furbearers, as well as songbirds, raptors, migratory and resident waterfowl, wading birds, woodpeckers, and many species of amphibians and reptiles.

3.2.1.2 Discussion of Impacts

3.2.1.2.1 No Action

Under the no action alternative, adverse impacts to bottomland hardwood forests and habitat are associated with maintenance of authorized levels of protection. Additional impacts associated with the construction and operation of the proposed project would not occur. Bottomland hardwood forest habitat within the footprint of disturbance would not be affected, and wildlife would continue to utilize the habitat. There would be no changes to the existing practice of forced drainage of the protected side.

3.2.1.2.2 Proposed Action

Direct, Indirect and Cumulative Impacts

WBV-14f - Under the proposed action in this reach, the levee enlargement would be constructed on the flood side of the existing levee within the existing ROW. Direct effects to medium to high quality bottomland hardwood forest habitat would be permanent along this entire reach. Indirect effects of construction (e.g., noise, fugitive dust, etc.) would have only temporary effects to the habitat and would not be significant. Filling of the 45.5 acres of bottomland hardwood forests would contribute to the cumulative loss of these wetland resources within the ecosystem. These wetlands would be mechanically cleared and grubbed to facilitate the construction of the levee and would require mitigation.

WBV-14d - Under the proposed action in this reach, the existing floodwall would be replaced with a larger floodwall to provide the 100-year level of protection. Direct impacts to medium to high quality bottomland hardwood forest habitat would be permanent. Indirect effects of construction include noise and vibrations that would have only temporary non-significant impacts to bottomland hardwood forest habitats. Filling of approximately 0.5 acres of bottomland hardwood forests would contribute to the

cumulative loss of these wetland resources within the ecosystem. These wetlands would be mechanically cleared and grubbed to facilitate the demolition of the existing floodwall and construction of the new floodwall and would require mitigation.

WBV-14e - Under the proposed action in this reach, the levee enlargement would be constructed on the protected side of the existing levee partially outside of the existing ROW. Direct effects to medium to high quality bottomland hardwood forest habitat would be permanent along this entire reach. This reach includes elevating Hwy 3134 to the 100-year level of protection and installing associated culverts to facilitate animal passage and sheetflows to maintain hydrology. Indirect effects to the proposed action reaches include construction noise, debris, fugitive dust, and emissions from heavy equipment. Filling of the 44.5 acres of bottomland hardwood forests would contribute to the cumulative loss of these wetland resources within the ecosystem. These wetlands would be mechanically cleared and grubbed to facilitate the construction of the levee and relocation of the drainage canal and would require mitigation.

3.2.2 Cypress-Tupelo Swamps

3.2.2.1 Existing Conditions

The cypress-tupelo swamps in the project area surround the Bayou Des Familles ridge system and narrow elevated finger ridges. The cypress-tupelo swamps on the flood side of the hurricane protection levee exist in reaches WBV-14b, a portion of WBV-14c, and WBV-14e. No cypress-tupelo swamps exist in reaches WBV-14f or WBV-14d.

Cypress-tupelo swamps remain inundated throughout much of the year due to tidal exchange and rainfall events and are a highly valuable wildlife habitat resource. These wetlands provide flood storage, water quality benefits through filtration of pollutants such as nitrates and phosphates that might otherwise reach water bodies via runoff, areas for feeding, cover, resting, and reproduction for faunal components, exchange of nutrients and detritus materials, diversity, and maintenance of air quality through evapotranspiration of the trees.

The USFWS field studies, conducted in March 1986, determined that the site provides valuable habitat for an abundance of wildlife species. The marshlands and forested wetlands provide feeding, resting, nesting, hunting, and escape habitat to numerous species of game and non-game mammals and commercially important furbearers, as well as songbirds, raptors, migratory and resident waterfowl, wading birds, woodpeckers, and many species of amphibians and reptiles.

3.2.2.2 Discussion of Impacts

3.2.2.2.1 No Action

Under the no action alternative, adverse impacts to cypress-tupelo swamps and habitat are associated with maintenance of authorized levels of protection. Additional impacts associated with the construction and operation of the proposed project would not occur. Cypress-tupelo swamps within the footprint of disturbance would not be affected, and wildlife would continue to utilize the habitat. There would be no changes to the existing practice of forced drainage of the protected side.

3.2.2.2.2 Proposed Action

Direct, Indirect and Cumulative Impacts

Cypress-tupelo swamps are located on the flood side of the levee in a portion of WBV-14c and all of WBV-14b. Within WBV-14c, cypress-tupelo swamps would be avoided, as all proposed work is within the existing ROW. There is ample room to expand the levee footprint to the protected side without impacting the wetlands. Within WBV-14b, cypress-tupelo swamps would be impacted with the proposed action. These swamps are considered medium to high quality wetlands.

Direct effects to medium to high quality cypress-tupelo swamp habitat would be permanent within reach WBV-14b. Indirect effects of construction (e.g., noise, fugitive dust, etc.) would have only temporary effects to the habitat and would not be significant. Filling of the 29.75 acres of cypress-tupelo swamps would contribute to the cumulative loss of these wetland resources within the ecosystem. These wetlands would be mechanically cleared and grubbed to facilitate the construction of the levee and would require mitigation. Construction of the proposed action would contribute to the cumulative losses of cypress-tupelo swamps within the GNOHSDRRS.

3.2.3 Bayou aux Carpes Wetland Area (Section 404(c) Site)

As originally authorized in the 1960s, the Harvey Canal-Bayou Barataria Levee Project, south of the V-line levee, included draining over 3,000 acres of the Bayou aux Carpes wetlands for developmental purposes. In response to environmental concerns by USEPA (which was considering a "veto" of the project under Section 404(c) of the Clean Water Act) and several public interest groups, the USACE agreed to a modified proposed project design in 1976. The proposed project was modified by: 1) substituting floodgates for earthen closures at the mouths of the Bayou Des Familles, Bayou aux Carpes, and the Southern Natural Gas Pipeline Canal, 2) eliminating the land reclamation features, and 3) stipulating if a pumping station was needed for flood control, that it be operated in a manner which would maintain the integrity of the swamp. Jefferson Parish also agreed to these modifications, but was unable to provide local assurance for the modified project due to State court litigation brought about by area property owners. The landowners filed suit in Federal court, requesting the court to order the USACE to complete the original project. In that lawsuit, the U.S. District Court (on remand from the U.S. Court of Appeals for the 5th Circuit), issued an order that stayed further proceedings and gave USEPA a timeframe within which to decide whether or not to proceed with a veto action under Section 404(c) of the Clean Water Act. This provision of the Clean Water Act affords USEPA the authority to designate areas in which discharges of dredged or fill material are prohibited.

In October 1985, USEPA exercised its veto authority under Section 404(c) of the Clean Water Act, and with three specific exceptions, prohibited discharges of dredged or fill material to wetlands in the Bayou aux Carpes site. This area is bounded by the existing V-line levee, the Estelle Canal, Bayou Barataria, Bayou des Familles, and the Lafitte-Larose Hwy. The Federal District Court for the Eastern District of Louisiana subsequently found the USEPA action, which rendered the original project infeasible, was consistent with the law and supported by the agency's administrative record. The prohibition on discharges of dredged or fill material in the Bayou aux Carpes site remains in effect today.

In the 1980s, the USACE proposed to construct a hurricane protection levee for the west bank of Jefferson Parish. The preferred alternative would have resulted in the discharge of dredged or fill material to 59 acres of wetlands in the Bayou aux Carpes and to 257 acres of wetlands in the JLNHPP. USEPA rated the Draft EIS "environmentally unacceptable" based on proposed adverse impacts to the Bayou aux Carpes Section 404(c) area, inconsistency with a separate agreement with Jefferson Parish regarding wetland protection at this site, and other adverse wetland and water quality impacts. As an alternative, USEPA supported the "V-Levee North" alignment, which is the alignment that was adopted and subsequently constructed.

3.2.3.1 Existing Conditions

The Bayou aux Carpes Section 404(c) site is a highly productive and diverse swamp wetland habitat that is of significant value to the ecosystem for many species of fish and wildlife. The portion of the site immediately south of the V-line levee consists of wooded wetlands, cypress-tupelo swamps, freshwater marshes, flotant marshes, and scrub-shrub wetlands. The wooded wetlands and marshes comprise a typical mixed bottomland hardwood/cypress-tupelo swamp habitat dominated by a canopy of bald cypress and tupelo gum trees with localized densities determined by drainage and elevation characteristics. The existing cypress trees within this area are highly valuable, exhibiting successful naturally-regenerating cypress trees. Flotant marshes are also a highly valuable, unique marsh type, usually found in freshwater or intermediate situations. They are composed of thick, floating mats of vegetation with open water beneath them. As flotant marshes age, they gradually root in at the bottom. Other dominant vegetation in the area includes black willow, red maple, buttonbush, palmetto, and wax myrtle.

These wetlands serve as valuable feeding, resting, nesting, hunting, and/or escape habitat for numerous species of game and non-game mammals, commercially important furbearers, songbirds, raptors, migratory and resident waterfowl, wading birds, and woodpeckers, as well as many species of amphibians and reptiles, including the American alligator. Some important wildlife inhabiting the area includes the gray squirrel, pileated woodpecker, mink, wood duck, great egret, and American alligator. These wetlands also serve as groundwater recharge areas, storage areas for storm and flood waters, and natural water filtration areas. These wetlands provide protection against wave action, erosion, storm damage, and serve to store waters and release the water slowly after absorbing pollutants and excess nutrients.

Photo 4. Bayou aux Carpes Wetland Area.

The wetlands and open water bodies of the Section 404(c) site provide nursery, feeding and spawning habitat for numerous species of recreationally and commercially important freshwater and estuarine fishes and shellfishes. Wetlands such as these in the upper Barataria Basin also provide organic detritus to nearby estuarine waters, thereby contributing to the production of estuarine-dependent fishes and shellfishes.

Swamps remain inundated through tidal exchange and rainfall throughout the year and are an important fish and wildlife habitat resource. The habitat within the Bayou aux Carpes wetland area has high wildlife value within the ecosystem and it exhibits national value. The probability of future development of these wetlands is considered low, for two reasons: 1) they have been designated as a Section 404(c) site, and 2) legislation is currently pending to include this area as part of the JLNHPP to preserve its integrity and value to the nation.

3.2.3.2 Discussion of Impacts

3.2.3.2.1 No Action

Under the no action alternative, the 100-year level of protection would not be constructed and any future impacts would be associated with maintenance of authorized levels of protection. The Bayou aux Carpes wetlands would continue to function as a high quality public resource.

3.2.3.2.2 Proposed Action

Under the proposed action, the levee enlargement in WBV-14e would be constructed on the protected side of the existing levee outside of the existing ROW. The Bayou aux Carpes site is located on the flood side of the existing levee. All impacts from the proposed action related to this resource would be avoided. No significant direct, indirect, or cumulative impacts would occur as a result of the proposed action for this reach.

3.2.4 Fisheries and Aquatic Habitat

3.2.4.1 Existing Conditions

The study area contains an existing canal within portions of all reaches on the protected side, and several borrow pits within reaches WBV-14b and WBV-14f on the flood side of the existing levee. All of the canals and borrow pits support viable fisheries and aquatic habitat; however, the fish in the borrow pits are generally represented by species tolerant of low dissolved oxygen levels, such as mosquitofish, killifish, shortnose and spotted gar, yellow bullhead, and threadfin shad.

The six existing borrow pits within reach WBV-14b are currently dominated by water hyacinth during the summer months. Invasive species such as the water hyacinth are not bound by ecological constraints. They can flourish and crowd out native species, resulting in low dissolved oxygen levels, causing the loss of wildlife food and sheltering resources.

A diversity of species are present within or adjacent to the borrow pits and the canal. A variety of plant species provide important fish habitat utilized for nesting, feeding, and cover. Bayou Segnette and many of its adjacent canals experience poor water quality conditions at certain times of the year, due to wastewater outfall and storm water runoff. Therefore, these water bodies provide diminished value for fish and other aquatic life. Within the existing levee system, aquatic habitat within the existing canals and borrow pits has low to moderate value for fish and aquatic organisms.

Low dissolved oxygen concentrations and high biochemical oxygen demand, high nitrogen and phosphorus levels, and high fecal coliform bacteria densities exist in area waterways. The comparatively low mean salinity in the canals and bayous of the interior of the drainage area implies that saltwater intrusion into these areas is not significant.

3.2.4.2 Discussion of Impacts

3.2.4.2.1 No Action

Under the no action alternative, adverse impacts to fisheries and aquatic resources are associated with maintenance of authorized levels of protection. Additional impacts associated with the construction of the 100-year level of protection would not occur. There would be minimal direct, indirect, or cumulative impacts to fisheries and aquatic habitat.

3.2.4.2.2 WBV-14c

Proposed Action

Direct and Indirect Impacts

Under this alternative, the levee enlargement would be constructed on the protected side of the existing levee within the ROW. Minimal permanent direct or indirect impacts on the fisheries and aquatic habitat are expected within this levee reach. Indirect effects to adjacent waters would include increased local turbidity, decreased dissolved oxygen levels, vibrations, and subsurface noise due to construction activities. Conditions of adjacent waters would return to normal after construction is completed.

Cumulative Impacts

Construction of the proposed action would contribute to the cumulative losses of fisheries and aquatic habitat resources within the GNOHSDRRS.

3.2.4.2.3 WBV-14b

Proposed Action

Direct and Indirect Impacts

Under this alternative, the levee enlargement would be constructed on the flood side of the existing levee within the existing ROW. Aquatic organisms and habitat in the borrow pits within reach WBV-14b would be adversely impacted as the borrow pits would need to be partially or fully filled to accommodate the levee expansion. Once filled, the borrow pits would be lost as future habitat for fish and other aquatic organisms. Motile organisms present would attempt to avoid construction activities and seek refuge in adjacent undisturbed waters. Some benthic organisms would be impacted due their inability to vacate the construction area. Indirect effects would include increased local turbidity, decreased dissolved oxygen levels, vibrations, and subsurface noise. Overall, impacts of the proposed action to fisheries and aquatic habitat would not be significant.

Cumulative Impacts

Construction of the proposed action would result in minor cumulative impacts due to loss of aquatic habitat in the filled borrow pits. Impacts are expected to be localized, with no long-term adverse impacts on the local aquatic ecosystem or its residential flora and fauna. Construction of the proposed action would contribute to the cumulative losses of fisheries and aquatic habitat resources within the GNOHSDRRS.

3.2.4.2.4 WBV-14f

Proposed Action

Direct, Indirect, and Cumulative Impacts

Under this alternative, the levee enlargement would be constructed on the flood side of the existing levee within the existing ROW. Impacts within this reach would be similar to those discussed above under reach WBV-14b.

3.2.4.2.5 WBV-14d

Proposed Action

Direct and Indirect Impacts

Under this alternative, the existing floodwall would be replaced with a larger floodwall within the existing ROW to provide the 100-year level of protection. No permanent direct or indirect impacts on the fisheries or aquatic habitat near this reach would occur due to the proposed action. Some indirect effects to these resources would include increased local turbidity, decreased dissolved oxygen levels, vibrations, and subsurface noise. Overall, impacts of the proposed action to fisheries and aquatic habitat would not be significant.

Cumulative Impacts:

Construction of the proposed action would not result in significant cumulative impacts, but would contribute to the cumulative losses of fisheries and aquatic habitat resources within the GNOHSDRRS.

3.2.4.2.6 WBV-14e

Proposed Action

Direct and Indirect Impacts

Under this alternative, the levee enlargement would be carried out on the protected side of the existing levee to provide the 100-year level of protection. An additional 200 ft of ROW would be required to implement this action. The proposed action would require the relocation of the existing canal further into the protected side of the reach. Fisheries and aquatic life in the existing canal would be adversely impacted as the canal would need to be filled to accommodate the levee expansion. Once filled, the canal would be lost as possible habitat for fish and other aquatic organisms, but replaced by the new canal which would re-populate native fisheries and aquatic life. Motile organisms present would attempt to avoid construction activities and seek refuge in adjacent undisturbed waters. Some benthic organisms would be impacted due their inability to vacate the construction area. Construction activities would likely cause indirect effects by increased local turbidity, decreased dissolved oxygen levels, vibrations, and subsurface noise. Overall, impacts of the proposed action to fisheries and aquatic habitat would not be significant.

Cumulative Impacts

Construction of the proposed action would result in minor cumulative impacts due to loss of fisheries and aquatic habitat in the filled canal. Impacts are expected to be localized, with no long-term adverse impacts on the local aquatic ecosystem or its residential flora and fauna. The project would contribute to the cumulative losses of fisheries and aquatic habitat resources within the GNOHSDRRS.

3.2.5 Wildlife

3.2.5.1 Existing Conditions

The majority of the undeveloped area north of the V-line levee is comprised of wooded bottomland hardwood wetlands and cypress-tupelo swamps. Dominant species indigenous to this area range from cypress-tupelo to black willow. Freshwater and flotant marshes are also present, although years of drainage have encouraged the growth of non-marsh plants such as blackberry, thistle, and golden rod. Lack of standing water in both the wooded swamps and marshes has greatly diminished the value of the area to most wetland-dependant species. Undeveloped areas outside the existing levee system, including the JLNHPP and the Bayou aux Carpes Section 404(c) site, are dominated by freshwater and brackish marsh and varying quality wooded wetlands that provide valuable food and shelter to a wide range of wildlife species.

The projection of future conditions, prepared by USFWS as part of a prior HEP analysis, indicated that with the completion of the proposed actions, all evaluated species would suffer loss of available habitat and, if the undeveloped lands protected by the improved levee system were subsequently cleared and developed, those lands would lose virtually all of their current wildlife value.

A variety of wading birds such as egrets and herons utilize the nearby canals and roost in nearby trees. Other wildlife species found in the study area include squirrels, rabbits, deer, mink, muskrat, alligator, and various songbirds.

Migratory and resident waterfowl and other wetland game birds make minimal use of study-area wetlands due to artificial drainage and human development. Wetland game birds that may occur in the study area are the wood duck, common snipe, and American woodcock.

Non-game birds in the study area include many species of wading birds, shorebirds, and songbirds (both migratory and non-migratory). Wading birds include the little blue heron, great blue heron, great egret, snowy egret, cattle egret, and green heron. The killdeer is a common shorebird in the project area. Forested wetland habitats also support raptors such as the Mississippi kite, red-shouldered hawk, and barred owl; woodpeckers such as pileated, downy, hairy, and red-bellied; and a variety of songbirds including northern parula, yellow-rumped warbler, prothonotary warbler, red-eyed vireo, Carolina chickadee, and tufted titmouse.

Suitable habitat exists for the American alligator and bald eagle, two formerly Federally-listed threatened and endangered (T&E) species, within the study area. There are no documented active nests in the footprint of the proposed project, but bald eagles are present in the vicinity of the study area, and may utilize project area trees for hunting and resting.

On 4 June 1987, the American alligator was removed from the Federal T&E species list as a result of a significant recovery in their population. On 9 July 2007, the bald eagle was removed from the Federal T&E species list as a result of a significant recovery in their population; however, the bald eagle continues to be protected under the Bald and Golden Eagle Protection Act and the Migratory Bird Treaty Act.

The project area supports a variety of mammalian species. White-tailed deer, the only big game animal found in the study area, utilize project-area forested wetlands. Small

game mammals, such as swamp rabbit, gray squirrel, and raccoon, also utilize those habitats. Commercially important furbearers in the project area include nutria, mink, river otter, raccoon, and gray fox. Nutria are most abundant in proximity to open water. Numerous species of small rodents, insectivores, and bats inhabit the area, as do other mammals such as the marsupial and nine-banded armadillo.

Various species of frogs, turtles, and snakes are common in the project area. Representative species include the pig frog, bronze frog, green tree frog, red-eared slider, Mississippi mud turtle, speckled king snake, broad-banded water snake, and western cottonmouth.

The canals in the study area provide low to moderate habitat value for fish and aquatic organisms. The larger canals offer only minimal habitat diversity and the smaller canals can become choked with vegetation during the summer.

Urban expansion has led to increased eutrophication of many waterways within the project area. Important factors in that process include increased volume of nutrient-laden urban runoff, decreased acreage of wetlands that serve to filter nutrients emanating from developed urban areas, and increased structural flood control and drainage measures which directly bypass adjacent wetlands and shunt urban runoff into downstream aquatic systems. Consequently, degraded water quality in the Barataria Basin remains a concern relative to wildlife resources.

3.2.5.2 Discussion of Impacts

3.2.5.2.1 No Action

Under the no action alternative, adverse impacts to wildlife would be associated with maintenance of authorized levels of protection. Additional impacts associated with the construction of the 100-year level of protection would not occur. There would be minimal direct, indirect, or cumulative impacts to wildlife or their habitat.

3.2.5.2.2 WBV-14c

Proposed Action

Direct and Indirect Impacts

Under the proposed action, the levee enlargement would be constructed on the protected side of the existing levee within the existing ROW. No permanent direct or indirect impacts to wildlife would occur as a result of the proposed action.

Cumulative Impacts

Construction of the proposed action would not result in significant cumulative impacts, but would contribute to the cumulative losses of wildlife resources within the GNOHSDRRS.

3.2.5.2.3 WBV-14b

Proposed Action

Direct and Indirect Impacts

Under this alternative, the levee enlargement would be constructed on the flood side of the existing levee within the existing ROW. The project area provides habitat for many wildlife species. Project construction would result in the conversion of the project area's habitat into a levee that would not provide nesting habitat for wildlife species that inhabit the area. The proposed action may have minor impacts to wildlife habitat near WBV-43, which has been stripped of vegetation and is mowed regularly. Most wildlife would be able to flee the project area during the construction period and avoid being impacted. The loss of forested wetland habitat associated with project implementation would not, in itself, decimate local wildlife populations. Localized permanent direct and indirect impacts on wildlife near this reach would occur as a result of construction activities.

Indirect effects to wildlife species due to construction activities (e.g., noise, vibration) within adjacent wetlands would be short-term and temporary. The area of disturbance is a relatively small part of the local aquatic ecosystem.

Cumulative Impacts

Construction of the proposed action would not result in significant cumulative impacts, but would contribute to the cumulative losses of wildlife resources within the GNOHSDRRS.

3.2.5.2.4 WBV-14f

Proposed Action

Direct, Indirect, and Cumulative Impacts

Under the proposed action, the levee enlargement would be constructed on the flood side of the existing levee within the existing ROW. Impacts would be similar in scope to WBV-14b, shown above.

3.2.5.2.5 WBV-14d

Proposed Action

Direct and Indirect Impacts

Under the proposed action, the existing floodwall would be replaced with a larger floodwall to provide the 100-year level of protection. All construction would occur within the existing ROW. No permanent direct or indirect impacts to wildlife would occur as a result of construction of the proposed action. Temporary indirect impacts associated with noise levels and air quality from heavy equipment would likely occur due to proximity of construction activities to nearby wildlife habitat. Conditions would return to normal once construction is completed.

Cumulative Impacts

Construction of the proposed action would not result in significant cumulative impacts, but would contribute to the cumulative losses of wildlife resources within the GNOHSDRRS.

3.2.5.2.6 WBV-14e

Proposed Action

Direct and Indirect Impacts

Under this alternative, the levee enlargement would be carried out on the protected side of the existing levee to provide the 100-year level of protection. An additional 200 ft of ROW would be required to implement this action. The proposed action would require the relocation of the existing canal further into the protected side of the reach. Wildlife in and around the existing canal would relocate during construction activities as the canal would need to be filled to accommodate the levee expansion. Once filled, the canal would be lost as possible habitat for shorebirds and other aquatic wildlife, but would be replaced by the new canal which would re-populate with native wildlife species. Juvenile species of animals that inhabit the project area would attempt to avoid construction activities and seek refuge in adjacent undisturbed waters, but may be directly impacted by construction activities. Construction activities would likely cause temporary impacts to noise conditions and air quality within the project vicinity.

Cumulative Impacts

Construction of the proposed action would result in minor cumulative impacts due to loss of wildlife habitat. Impacts are expected to be localized, with no long-term adverse impacts on the local aquatic ecosystem. The proposed action would contribute to the cumulative losses of wildlife resources within the GNOHSDRRS.

3.2.6 Threatened and Endangered Species

3.2.6.1 Existing Conditions

Except for the occasional transient species, no Federally-listed endangered, threatened, or candidate species under USFWS jurisdiction are known to exist in the project area. The American alligator is common in area canals. This species is listed as protected under the Similarity of Appearance clause of the Endangered Species Act (Federal Register 1981, Vol. 46, pp. 40664-40669), but is not biologically threatened or endangered. Therefore, no Biological Assessment or further Section 7 consultation under the Endangered Species Act is required with the USFWS.

The Fish and Wildlife Coordination Act provides that whenever the waters or channel of a body of water are modified by a department or agency of the U.S., the department or agency first shall consult with the USFWS and with the head of the agency exercising administration over the wildlife resources of the state where construction would occur, with a view to the conservation of wildlife resources.

3.2.6.2 Discussion of Impacts

3.2.6.2.1 No Action

Under the no action alternative, any adverse impacts to threatened and endangered species would be associated with maintenance of authorized levels of protection. Additional impacts associated with the construction of the 100-year level of protection would not occur. There would be no direct, indirect, or cumulative impacts to threatened and endangered species or their habitat.

3.2.6.2.2 Proposed Actions for all Reaches

Direct, Indirect, and Cumulative Impacts

Under the proposed actions for all reaches, no listed endangered, threatened, or candidate species are known to exist in the potential project impact areas. Therefore, no direct, indirect, or cumulative effects would be predicted to protected species or their critical habitat as a result of implementing the proposed actions. The USFWS concurred with the USACE's determination that project implementation would not adversely affect any threatened and endangered species or their critical habitat in their letter dated 26 November 2007.

3.2.7 Air Quality

Air quality is regulated by the Louisiana Environmental Quality Act of 1983, as amended, and the Clean Air Act of 1963, as amended. Air quality is technically significant because of the status of regional ambient air quality in relation to the National Ambient Air Quality Standards (NAAQS). It is socially significant because of health concerns and the public's desire for clean air.

Pursuant to the last amendment of the Clean Air Act (CAA) in 1990, the USEPA set NAAQS for six principal pollutants, termed "criteria" pollutants. They are: carbon monoxide, nitrogen dioxide, ozone, lead, particulates of 10 microns or less in size (PM-10 and PM-2.5), and sulfur dioxide. Ozone is the only parameter not directly emitted into the air but forms in the atmosphere when three atoms of oxygen (03) are combined by a chemical reaction between oxides of nitrogen (NOx) and volatile organic compounds (VOC) in the presence of sunlight. Motor vehicle exhaust and industrial emissions, gasoline vapors, and chemical solvents are some of the major sources of NOx and VOC, also known as ozone precursors. Strong sunlight and hot weather can cause ground-level ozone to form in harmful concentrations in the air.

The Clean Air Act established two types of national air quality standards. Primary standards set limit to protect public health, including the health of "sensitive" populations such as asthmatics, children, and the elderly. Secondary standards set limits to protect public welfare, including protection against visibility impairment, damage to animals, crops, vegetation, and buildings (EPA 2007).

3.2.7.1 Existing Conditions

The air pollution levels in Jefferson Parish as of 2005 are detailed in Table 12. Criteria pollutant concentrations in Jefferson Parish are lower than or close to the average standard limits. Therefore, Jefferson Parish is in attainment with NAAQS.

Table 12: Air Pollution Levels in Jefferson Parish

Pollutant	Concentration	Standard Limit
Lead	0.13 µg/m^3	1.5 µg/m^3
Nitrogen Dioxide	0.009 ppm	0.053 ppm
Ozone (1-hour)	0.100 ppm	0.12 ppm
Ozone (8-hour)	0.08 ppm	0.08 ppm
Source: http://www.city-data.com/county/Jefferson_Parish-LA.html		

3.2.7.2 Discussion of Impacts

3.2.7.2.1 No Action

Under the no action alternative, any adverse impacts to air quality would be associated with maintenance of authorized levels of protection. Additional impacts associated with the construction of the 100-year level of protection would not occur. There would be no direct, indirect, or cumulative impacts to air quality.

Floods typically result in the contamination of surface waters with sewage and other contaminants that can contribute to poor air quality. In addition, sediment clean up can lead to temporary increases in fugitive dust from street sweeping. Also, the transportation of debris and rubble from storm clean up may contribute to local air quality emissions and a decrease in overall air quality.

3.2.7.2.2 Proposed and Alternative Actions for all Reaches

Direct and Indirect Impacts

Temporary deterioration of air quality in the project area would occur during construction activities due to heavy equipment emissions. A variety of construction equipment such as trucks, tractors, cranes, dozers, front end loaders, generators, hydraulic excavators, graders, rollers, water trucks and welders would be used for construction activity of all the reaches in the project area. Particulate emissions would be generated from activities that are associated with soil excavation and compaction. Emissions would include volatile organic compounds, carbon monoxide, and nitrous oxide emissions due to diesel powered equipment used for construction activities. The indirect effects to air quality would be related to the emissions from vehicle transportation of personnel and equipment to and from the job site on a daily basis until the completion of construction.

During the construction of the proposed project, proper and routine maintenance of all vehicles and other construction equipment would be implemented to ensure that emissions are within the appropriate design standards. Dust suppression methods would be implemented to minimize fugitive dust emissions. Air emissions from the proposed action would be temporary and should not significantly impair air quality in the region.

EPA's NONROAD2005 Model was used to calculate the emissions due to use of construction equipment for the reaches of the proposed project. The emissions for each pollutant are listed in Table 13. All reaches were assumed to be constructed simultaneously for calculation purposes.

Table 13: Total Air Emissions from Construction Activities

Pollutant	Acronym	Emission Total (ton/year)
Volatile Organic Compounds	VOC	30.47
Particulate Matter < 10 microns	PM-10	16.66
Particulate Matter < 2.5 microns	PM-2.5	16.07
Carbon Monoxide	CO	122.70
Nitrous Oxides	NO_x	355.42
Carbon Dioxide	CO_2	40603.12
Sulfur Dioxide	SO_2	0.04

Cumulative Impacts

The proposed action would contribute to the cumulative losses of air quality within the GNOHSDRRS.

3.2.8 Water Quality

3.2.8.1 Existing Conditions

The study area includes water quality resources such as wet bottomland hardwoods, cypress-tupelo swamps, an existing canal on the protected side of the existing levee, and several borrow pits on the flood side of the existing levee.

Area wetlands, including wet bottomland hardwoods and cypress-tupelo swamps, perform important water quality functions by removing and/or transforming nutrients, such as nitrogen and phosphorus. The mechanisms by which wetlands perform this function include the storage of nutrients within the sediment or plant material, the transformation of inorganic nutrients to their organic forms, and strategic transformation and subsequent removal of nitrogen as a gas. The ability of wetland vascular plants to remove nutrients from water and sediments during the growing season and release them later when light or temperatures will not support profuse algae growth is a general phenomenon, and important in maintaining water quality in adjoining systems.

During the summer months, the invasive water hyacinth flourishes in the borrow pits and often crowds out native species. As the overcrowded plants die, dead and decaying vegetation depletes the oxygen supply, leading to the demise of aquatic life dependent on higher oxygen levels.

Area canals may experience poor water quality conditions at times due to sanitary wastewater contamination of the drainage system. Raw or partially treated wastewater is often combined with stormwater runoff as a result of bypasses and overflows and infiltration and inflow from the sanitary wastewater conveyance system into the storm water conveyance system. Stormwater runoff also contributes urban pollution to the canal system. Low mean salinity levels within the drainage canals indicate that salt water intrusion is not a significant problem within these waters.

Within reach WBV-14e (see figure 7) a 200 ft wide by 15 ft deep interior drainage canal exists on the protected side of the existing levee. The canal is located approximately 240

ft northwest of the existing levee centerline. It is tidally influenced by Algiers Canal, Harvey Canal, and other nearby waterways. The canal provides habitat for aquatic organisms, fisheries, and wildlife that inhabit the area.

3.2.8.2 Discussion of Impacts

3.2.8.2.1 No Action

Under the no action alternative, any adverse impacts to water quality would be associated with the maintenance of authorized levels of protection. Additional impacts associated with the construction of the 100-year level of protection would not occur. There would be minimal direct, indirect, or cumulative impacts to water quality resources.

3.2.8.2.2 Proposed Action

The levee enlargement project would not cause significant direct or indirect impacts to water quality resources within the ecosystem. A temporary reduction in the ability of area wetlands to perform water quality functions within the project area would occur due to construction activities.

The partial or complete filling of the borrow pits would cause permanent impacts to water quality functions by decreasing available water to some species of fish, wildlife, and aquatic organisms. Temporary increases in turbidity levels may occur, causing motile organisms to relocate to adjacent waters. It is anticipated that the hauled in fill material would be clean clay material and not contain contaminants or pollutants. Flushing and circulation of water would be eliminated as the borrow pits would be filled to a height non-supportive of these functions. The excavation of the borrow pits was previously evaluated in EA # 198 and EA # 439.

Existing canals (excluding reach WBV-14e) within the project area may experience temporary increases in turbidity levels which would return to normal upon completion of construction activities. The proposed action for WBV-14e is an earthen levee enlargement with a protected side shift. This action would require an additional 200 ft of ROW for relocation of the drainage canal located on the protected side. The relocation would cause temporary water quality disturbance to approximately 44 acres. Construction activities would have indirect impacts on water quality due to uncontrolled runoff and poor sediment control practices. Such indirect impacts on water quality can be avoided by following best management practices and establishing an approved sediment control plan during construction.

The proposed action for all reaches would contribute to the cumulative losses of water quality within the GNOHSDRRS.

3.2.9 Cultural Resources

3.2.9.1 Existing Conditions

Records on file at the Louisiana Division of Archaeology and CEMVN indicate previously recorded cultural resources are located within 1 mile of the proposed project area. Site forms and archaeological reports on file at the Louisiana Division of Archaeology and CEMVN describe these known sites. Due to recent geologic development of the Mississippi delta, the earliest known archaeological sites in the region date to the Poverty Point period (1700 – 500 B.C.). Prehistoric midden sites in the region

are primarily located on natural levee deposits and other stable portions of the delta adjacent to bayou, river, lake and bay environments. Similarly, historic period sites and structures, such as plantations, farmsteads, residential and commercial properties were initially established on relatively high natural levee areas adjacent to waterways and later developed in drained back swamp and land-filled locations. Historic period watercraft has been recorded in the region. The reader may wish to refer to the following reports summarized below for specific historical information on the IER # 14 project area and its vicinity (Apollonio et al. 2003; Beavers 1982; Beavers et al. 1982; Goodwin et. al 1989; Kidder 1995; Maygarden et al. 2003; Stach 1996; Wells, 2007; Yakubik et al. 1996).

Seven previous cultural resource investigations have been conducted in the IER # 14 project area in preparation for past levee construction and later levee maintenance (Beavers et al. 1982; Goodwin et al. 1989; Kidder 1995; Yakubik et al. 1996; Stach 1996; Apollonio et al. 2003; and Maygarden et al. 2003). These studies identified three archaeological sites in the current project right of way and include 16JE217 (a 20th century sawmill), 16JE218 (Bayou Des Familles site), and 16JE223 (Camino site). Historic canal drainage features associated with early 20th century sugar cane fields are also present. Cultural resources investigations conducted primarily outside of the project area in the JLNHPP have identified a linear concentration of archaeological sites stretching down both sides of Bayou Des Familles (Beavers 1982). These sites represent prehistoric occupations and historic settlements, including numerous Islenos farmsteads established by Canary Islanders in the late 18th century.

In order to mitigate for the adverse effects caused by levee construction in the project right of way, Phase III data recovery investigations were conducted at Sites 16JE218 (Bayou Des Familles site) and 16JE223 (Camino site). Investigations at 16JE218 (Bayou Des Familles site) identified an intact Mississippian period shell midden (Kidder 1995). Testing and data recovery at 16JE223 (Camino site) identified components associated with a prehistoric shell midden, a late 18th century (Islenos) farmstead, and an early 19th century occupation (Goodwin et al. 1989; Yakubik et al. 1996). Both of these archaeological sites were located in the project ROW on the natural levee just east of the Bayou Des Familles. Site 16JE217 (a 20th century sawmill) was considered not eligible for listing on the National Register of Historic Places and no further work was recommended. An evaluation conducted by Maygarden and others (2003) found that the numerous agricultural drainage canals located in the project ROW are associated with 20th century sugar cane production and are not eligible for listing in the National Register of Historic Places.

CEMVN contracted Coastal Environments Inc. to conduct a Phase 1A cultural resources records review and field reconnaissance of the current IER # 14 study area (Wells 2007). At the time this study was initiated, researchers were asked to investigate an area larger than the existing project ROW. The investigated study area extends along the entire length of the levee alignment for approximately 14.25 miles in an area measuring 500 ft on the protected side and 500 ft on the flood side from the levee centerline for a total of 1,728 acres. Researchers utilized background research, cultural resources investigations review, soil and topographic analyses, and reconnaissance level field data to locate known cultural resources and to identify high potential areas for archaeological sites. Eleven locations exhibiting a high potential for archaeological sites were identified outside of the existing project ROW. No historic structures were found in the study area. Existing pump stations are relatively modern facilities of standard industrial design and are less than fifty years old. These facilities and the standard pumps found inside exhibit no characteristics that would make them eligible for listing on the National Register of Historic Places.

CEMVN held meetings with the Louisiana State Historic Preservation Officer (SHPO) staff and Tribal governments to discuss the emergency alternative arrangements approved for NEPA compliance and the development of a Programmatic Agreement (PA) to tailor the Section 106 consultation process under the alternative arrangements. CEMVN formally initiated Section 106 consultation for the WBV Hurricane Protection Project (100-year), which includes IER # 14, in a letter dated 9 April 2007. This letter emphasized that standard Section 106 consultation procedures would be implemented during PA development. A public meeting was held on 18 July 2007 to discuss the working draft PA. We anticipate the PA may be executed in the near future.

In letters sent to the SHPO and Indian Tribes dated 12 December 2007, CEMVN provided project documentation, evaluated cultural resources potential in the project area, and found that the proposed actions would have no impact on cultural resources. The SHPO, Choctaw Nation of Oklahoma, and the Chitimacha Tribe of Louisiana concurred with our "no historic properties affected" finding in letters dated 23 January 2008, 26 December 2007, and 27 December 2007, respectively. No other Indian Tribes responded to our request for comments. Section 106 consultation for the proposed actions is concluded. However, if any unrecorded cultural resources are determined to exist within the proposed project boundaries, then no work would proceed in the area containing these cultural resources until a CEMVN archaeologist has been notified and final coordination with the SHPO and Indian Tribes has been completed.

3.2.9.2 Discussion of Impacts

3.2.9.2.1 No Action

Under the no action alternative, all proposed activities associated with raising the existing levees and floodwalls up to the originally authorized grade would be conducted within the existing project ROW and would have no impact on significant cultural resources. The existing project ROW has been previously investigated for cultural resources and mitigation for project impacts to cultural resources has been completed. Subsequently, the project ROW has been subjected to severe ground disturbing activities associated with levee, floodwall, and pump station construction, and drainage canal and borrow excavations. The likelihood for additional intact and undisturbed cultural resources in the project ROW is extremely minimal. No further cultural resources investigations are recommended.

3.2.9.2.2 WBV-14c

Proposed Action

Direct Impacts

Under the proposed action, the levee enlargement would be constructed on the protected side of the existing levee within the existing ROW. Based on the review of state records, previous cultural resources studies, and the results of a recent reconnaissance cultural resources investigation in the project area, implementation of the proposed action would have no direct impact on cultural resources. The proposed action is located entirely in the existing project ROW. The project ROW has been previously investigated for cultural resources and mitigation for project impacts to cultural resources has been completed. Subsequently, the project ROW has been subjected to severe ground disturbing activities associated with levee, floodwall, and pump station construction, and drainage canal and borrow excavations. The likelihood for intact and undisturbed cultural resources in the project ROW is extremely minimal. No further cultural resources investigations are

recommended. The eleven high probability areas identified by Wells (2007) are located outside of the ROW and would not be impacted.

Indirect Impacts

Implementation of the proposed action could provide an added level of protection to known and unknown archaeological sites in the project vicinity on the protected side of the levee by reducing the damage caused by flood events. Erosion of ground deposits during flood events can result in severe damage and destruction of archaeological sites.

Cumulative Impacts

Implementation of the proposed action would have beneficial cumulative impacts on identified historic properties in the west bank metropolitan area. This proposed action is part of the ongoing Federal effort to reduce the threat to properties posed by flooding. The combined effects from construction of the multiple projects underway and planned for the WBV GNOHSDRRS would reduce flood risk and storm damage to significant identified archaeological sites, individual historic properties, engineering structures and historic districts.

3.2.9.2.3 WBV-14b

Proposed Action

Direct, Indirect and Cumulative Impacts

Under the proposed action, the levee enlargement would be constructed on the flood side of the existing levee within the existing ROW. Direct, indirect and cumulative impacts associated with the construction of the proposed action would be the same as the proposed action for reach WBV-14c. The proposed action would not impact cultural resources near WBV-43.

3.2.9.2.4 WBV-14f

Proposed Action

Direct, Indirect and Cumulative Impacts

Under the proposed action, the levee enlargement would be constructed on the flood side of the existing levee and remain within the existing ROW. Direct, indirect and cumulative impacts associated with the construction of the proposed action would be the same as the proposed action for reach WBV-14c.

3.2.9.2.5 WBV-14d

Proposed Action

Direct, Indirect and Cumulative Impacts

Under the proposed action, the existing floodwall would be replaced with a floodwall to provide the 100-year level of protection and remain within the existing ROW. Animal passage features would be added at the raised Hwy 3134 to minimize direct impacts to

wildlife. Direct, indirect and cumulative impacts associated with the construction of the proposed action would be the same as the proposed action for reach WBV-14c.

3.2.9.2.6 WBV-14e

Proposed Action

Direct Impacts

Under the proposed action, the levee enlargement would be constructed on the protected side of the existing levee to provide the 100-year level of protection. The proposed action would require an additional 200 ft of ROW. The area extending 200 ft beyond the project ROW has a very low potential for cultural resources. No high probability areas were identified in this reach (Wells 2007) and Goodwin and others (1989) found no archaeological sites within the project ROW adjacent to this area.

Indirect and Cumulative Impacts

Indirect and cumulative impacts associated with the construction of the proposed action would be the same as the proposed action for reach WBV-14c.

3.2.10 Recreation

3.2.10.1 Existing Conditions

Three major recreational areas of significance on the West Bank are the Lake Cataouatche, Lake Salvador complex (which includes the Salvador Wildlife Management Area), the JLNHPP and the Bayou Segnette State Park. Of these three areas, the JLNHPP is in the vicinity of the project area. Recreational activities in the area mainly consist of water-oriented sports such as fishing and boating, but also include hiking, camping, picnicking, photography, and hunting.

The JLNHPP occupies a core area of approximately 8,600 acres. This area includes four major management zones: the natural zone, the cultural resource zone, the park development zone, and the other use zone. The park's authorizing legislation designated an 11,400 acre park protection zone north of the core area that was indicated to help preserve the core area's natural values. The park development zone consists of a day use parking area, various canoe launching areas and hiking trails.

Bayou Segnette State Park is a 580-acre facility located just west of the project area, adjacent to Bayou Segnette and along the West Bank Expressway (US Parks at About.com 2007).

3.2.10.2 Discussion of Impacts

3.2.10.2.1 No Action

The no action plan includes raising existing levees to authorized heights within the existing ROW. Recreational resources would remain vulnerable to large tropical systems which could cause damages and temporary closures of the parks in WBV and Jefferson Parish. There would be no significant direct impacts on any of the recreational sites in the project area from construction of the no action alternative. There could be some minor temporary impacts to the recreation resources associated with the raising of the

existing levees; such as impacts to birding and wildlife-viewing in the vicinity of the project that might be affected by noise from activities associated with construction. There would be no indirect impacts to recreational resources.

3.2.10.2.2 WBV-14c

Proposed Action

Direct and Indirect Impacts

Under the proposed action, the levee enlargement would be constructed on the protected side of the existing levee within the existing ROW and there would be no direct impacts on any of the recreational sites near this reach. However, there may be temporary congestion of traffic corridors in the vicinity of the activity during the construction phase. The conditions would restore to normal after the construction activity is completed. Additionally, noise from construction activities could impact recreation use within the JLNHPP. There would be no indirect impacts to recreational resources in this reach.

Cumulative Impacts

Construction of the proposed action for this particular reach would not have any significant cumulative effect on this resource.

3.2.10.2.3 WBV-14b

Proposed Action

Direct and Indirect Impacts

Under the proposed action, the levee enlargement would be constructed on the flood side of the existing levee within the existing ROW. Some construction would be done in new ROW would be done near WBV-43. There would be no significant impacts on recreational resources.
Cumulative Impacts

Construction of the proposed action would not have cumulative impacts to recreational resources.

3.2.10.2.4 WBV-14f

Proposed Action

Direct and Indirect Impacts

Under the proposed action, the levee enlargement would be constructed on the flood side of the existing levee within the existing ROW. There would be no significant direct or indirect impacts on recreational resources.

Cumulative Impacts

Construction of the proposed action would not have cumulative impacts on recreational resources.

3.2.10.2.5 WBV-14d

Proposed Action

Direct and Indirect Impacts

Under the proposed action, the existing floodwall would be replaced with a floodwall to provide the 100-year level of protection. Since the proposed action would be constructed within the existing ROW, there would be no significant impacts to the JLNHPP. However, there could be some minor temporary impacts to the recreation resources associated with the demolition of the existing floodwall and construction of the new floodwall, such as impacts to birding and wildlife-viewing in the vicinity of the project that might be affected due to noise from activities associated with construction.

Cumulative Impacts

Construction of the proposed action would not have any cumulative impacts to recreational resources.

3.2.10.2.6 WBV-14e

Proposed Action

Direct and Indirect Impacts

Under the proposed action, the levee enlargement would be constructed on the protected side of the existing levee. Approximately 200 ft of additional ROW would be required for the proposed action. Construction of the proposed action would require the clearing of approximately 44.5 acres of bottomland hardwood forest habitat that offer some recreational value. Construction activity would cause temporary impacts to noise conditions and air quality in the vicinity of this reach. However, conditions would return to normal after the construction is completed. The addition of approximately 200 ft of additional ROW would create a larger green space on the protected side that could be use for passive recreation use.
Cumulative Impacts

Cumulative impacts of the proposed action would be assessed when more information is available and would be documented in the draft CED.

3.2.11 Aesthetics

3.2.11.1 Existing Conditions

Visually, the project area is characterized by wetlands and freshwater marsh, occasionally interspersed with natural ridges and man-made levees in an area of low relief. Construction of channels through the wetlands and marsh to enhance navigation and mineral extraction has resulted in spoil banks that are not naturally found within the project area. The marsh and wooded wetlands comprise a mixed bottomland hardwoods/cypress swamp dominated by a canopy of bald cypress and tupelo gum trees. Other dominant vegetation generally consists of black willow, red maple, buttonbush, palmetto, and wax myrtle.

3.2.11.2 Discussion of Impacts

3.2.11.2.1 No Action

Without implementation of the proposed action, visual resources would either change from existing conditions in a natural process, or change as dictated by future land use maintenance requirements. Regardless of what the future holds for the project area, visual access to the proposed project sites is minimal. The project area is remote and inaccessible to most as no public access roads (or hiking trails) are available.

3.2.11.2.2 Proposed Action within all Reaches

Direct, Indirect and Cumulative Impacts

Visual impacts from construction of the proposed action within all reaches would be similar to those described with the no action alternative.

3.3 SOCIOECONOMIC RESOURCES

The proposed project being evaluated is a part of the WBV of Jefferson Parish and the larger New Orleans MSA. The boundaries of IER # 14 generally follow the initial ROW of the federal back-levee, extending southward from the community of Westwego, following nearby drainage canals and alluvial ridges along Bayou des Familles, and then turning southeast to the V-line levee. The eastern boundary of the levee alignment includes urban developments while most of the area west of the alignment is wetlands and part of the JLNHPP. The project includes almost 11 miles of levee, and the construction of 10,762 linear ft of floodwalls, including fronting protection at three existing pump stations. The social and economic considerations discussed in this report are essentially those immediately within the proposed project site and ROW.

3.3.1 Noise

3.3.1.1 Existing Conditions

Noise and vibration impacts may be significant within the immediate vicinity of the proposed action, since some of the construction associated with providing the 100-year level of protection would include Westwego and other urbanized areas of metropolitan New Orleans. Existing Federal, state, and local guidelines have provided measurements of levels that might cause adverse impacts. Following Hurricanes Katrina and Rita, noise levels have fluctuated, declining temporarily in areas where evacuation occurred, and then increasing in areas where recovery efforts required construction or the removal of debris. Noise levels may have declined in any areas where additional restoration remains necessary but has not taken place. While some areas in the vicinity experienced major damage from Hurricanes Katrina and Rita, requiring construction and causing related noise, west bank neighborhoods including Westwego were less impacted, requiring less restoration and associated noise.

3.3.1.2 Discussion of Impacts

3.3.1.2.1 No Action

Under the no action alternative, the 100-year level of protection would not be constructed and any noise receptors located near the proposed project would not experience elevated noise levels due to construction of the proposed actions. However, noise levels due to construction of currently authorized levels of protection would continue. Levels of noise disturbances considered objectionable, including any disturbances associated with continued operation, maintenance, and/or completion of authorized flood and hurricane damage reduction projects, would require appropriate noise monitoring and abatement within existing guidelines.

3.3.1.2.2 Proposed Action for all Reaches

Direct, Indirect and Cumulative Impacts

Construction of the proposed action may cause temporary increases in noise and vibration from construction and associated traffic. The level of impact would vary depending upon such factors as time periods (night and day), distances between related noise sources and adjacent noise receptors (i.e., residences), and possible vegetative or acoustically-designed buffers. Noise impacts within the less populated areas along the proposed project ROW may be less significant and limited to the need to reduce damage to employees constructing and maintaining the project area.

3.3.2 Transportation

3.3.2.1 Existing Conditions

Transportation systems considered within the study area include roads and bridges used for vehicular access crossing or paralleling the study area boundaries, as well as pipelines, a nearby railroad, and waterways including the deep-draft channel of the Mississippi River. The upper end of the proposed project site includes the West Bank Expressway (an alternate business route of U.S. Highway 90) and heavily used roads and bridges as part of the urbanized area of New Orleans. A section of Hwy 45 parallels Bayou des Familles and boundaries of the project area as far south as the V-line levee near its intersection with Hwy 3134 toward the communities of Jean Lafitte, Lafitte, and Barataria, located south of the proposed project sites.

Pipelines in the vicinity have been critical for delivery of oil and gas production, including much of the production from adjacent Federal waters along the Outer Continental Shelf (OCS). The Mississippi River channel is north of the proposed project site, while the Gulf Intracoastal Waterway (GIWW) passes nearby, south of the proposed project site. The Texas and Pacific and Southern Pacific rail lines pass through Westwego, north of the project ROW. Hurricanes Katrina and Rita caused disruption to transportation systems in the proposed project area, largely due to severely damaged bridges such as the Interstate 10 (I-10) bridge between New Orleans and Slidell.

3.3.2.2 Discussion of Impacts

3.3.2.2.1 No Action

Under the no action alternative, the 100-year level of protection would not be constructed and no associated increase in vehicles and/or rail and barge deliveries would occur. However, authorized improvements to the existing hurricane levee system would continue, as well as operations and maintenance activities. There would be temporary increases in transportation impacts from authorized activities.

3.3.2.2.2 Proposed Action for all Reaches

Direct, Indirect and Cumulative Impacts

Construction of the proposed action would increase the number of vehicles on roadways and/or rail and barge deliveries leading to the proposed project sites during construction activities. Within reach WBV-14d, Hwy 3134 would be raised between the WBV-14d floodwall and the WBV-14e levee. These actions would likely cause transportation delays in the vicinity of the project site, as well as potential damages to existing road surfaces. However, these impacts on transportation would be temporary and original conditions would be restored after construction is complete. No indirect or cumulative impacts would be anticipated.

3.3.3 Population and Housing

3.3.3.1 Existing Conditions

As part of the larger New Orleans MSA, housing and the population in the vicinity of the proposed project are heavily dependent upon flood and storm damage reduction extending southward from a point in Westwego to the V-line levee alignment. Residential developments closest to the existing levees within Westwego include single-family units and low-rise apartments and are primarily located within the urbanized area of metropolitan New Orleans. Leveed areas extending further southward also include residential developments; however, they are closer to adjacent wetland areas, in effect lowering overall population density in areas south of Westwego. The 2000 U.S. Census estimated that the population adjacent to the project ROW was approximately 15,600 and that the number of housing units was approximately 5,300. Hurricane Katrina caused damage to residential property in the area. No post-Hurricane Katrina detailed estimates of the population or the numbers of restored housing units immediately adjacent to the ROW are currently available.

3.3.3.2 Discussion of Impacts

3.3.3.2.1 No Action

Under the no action alternative, the 100-year level of protection would not be constructed. Improvements to the currently authorized level of protection would continue to be implemented. The population and housing immediately adjacent to existing sections of authorized improvements, as well as other sections of the sub-basin, would be subject to damage from tropical storm events as a result of the no action alternative.

3.3.3.2.2 Proposed Action for all Reaches

Direct, Indirect and Cumulative Impacts

The proposed action would increase the level of hurricane damage reduction within the protected area of the existing levee sections. The proposed action would not require the relocation of existing housing units or the displacement of any members of the population. While adjacent areas include urban and suburban developments, the engineering design and environmental analysis indicate that there would be no permanent direct, indirect, or cumulative adverse impacts to housing units as a result of the proposed action.

3.3.4 Business, Industry, and Public Facilities and Services

3.3.4.1 Existing Conditions

Businesses, industries, and other public facilities and services exist in the immediate vicinity of the proposed levee improvements. The Texas and Pacific Railroad parallels the Mississippi River and traverses through Westwego. Coastal and offshore oil and gas production and nearby commercial fishing add to the local industrial base and commercial developments in close proximity to the proposed project ROW. Other public facilities and services in the vicinity include those traditionally provided in large metropolitan areas, such as police and fire protection, sanitation services, and water supplies, public education, and emergency management. An extensive network of levees and pumping systems is also in place in the proposed ROW. The flood side boundaries of the existing levees are typically wetlands that form the JLNHPP.

3.3.4.2 Discussion of Impacts

3.3.4.2.1 No Action

Under the no action alternative, the 100-year level of protection would not be constructed. The levee system would continue to be improved to the currently authorized level. As a result, businesses, industry, and public facilities and services could remain vulnerable to tropical storm events.

3.3.4.2.2 Proposed Action for all Reaches

Direct, Indirect and Cumulative Impacts

Under the proposed action, the existing levee system would be improved to provide the 100-year level of protection, reducing the risk of flood damage from these storm events. While adjacent areas include urban and suburban developments, the engineering design and environmental analysis indicate that there would be no permanent adverse impacts to any business, industry and public facilities as a result of the proposed action. Due to the construction activity, there would be a temporary increase for need for business, industry and public facilities and services. However, the conditions would become normal after the construction is complete. No indirect or cumulative impacts would be anticipated.

3.3.5 Health and Safety

3.3.5.1 Existing Conditions

Flood and hurricane protection systems are critical for health and safety immediately adjacent to levee ROW in the vicinity of the proposed project site. A primary function of the existing levees is to maintain health and safety within the New Orleans Metropolitan area as well as that of people living immediately adjacent to the project ROW. Three medical facilities are located within four miles of the Westwego section of the proposed project site, including the West Jefferson Medical Center, a 450-bed hospital, and the smaller Advance Care Hospital and Community Care Hospital. Numerous other medical facilities are available within a 15-mile radius of the Marrero and Westwego communities.

3.3.5.2 Discussion of Impacts

3.3.5.2.1 No Action

The currently authorized protection of Federal levees would help maintain health and safety along the ROW, but would not provide the greater protection of the 100-year level of protection as in the proposed plan.

3.3.5.2.2 Proposed Action for all Reaches

Direct, Indirect and Cumulative Impacts

Under the proposed action, the existing levee system would be improved to provide the 100-year level of flood protection, reducing the risk of flood damage from these storm events to the communities of Westwego, Marrero, Harvey, and Estelle. No indirect or cumulative adverse impacts would be anticipated.

3.3.6 Employment, Income, and Local Tax Base

3.3.6.1 Existing Conditions

The construction and maintenance of levees along the existing back levees have contributed to the local economy. The local economy includes employment and income of people living nearby that helps sustain the local tax base. Employment and income sources immediately adjacent to the project sites include businesses located along Lapalco Boulevard and the nearby West Bank Expressway (Business Alternative U.S. Highway 90), largely in Westwego. While displacements and shortages of employment and income occurred in some areas of the New Orleans area as a result of Hurricanes Katrina and Rita, residents living in close proximity to the IER # 14 project area were able to return home by 14 September 2005, and respond to the recovery effort requiring employment and generating income through both public and private restoration efforts.

3.3.6.2 Discussion of Impacts

3.3.6.2.1 No Action

Quantified estimates of impacts to employment, income, and local tax base immediately within the IER # 14 ROW and areas immediately adjacent to the potential project sites

are not available. However, gradual re-population is expected, along with increases in employment, income and tax base.

3.3.6.2.2 Proposed Action for all Reaches

Direct, Indirect and Cumulative Impacts

As in the case of the authorized completions of construction and maintenance for improvements, the proposed improvements along the project ROW would generate additional employment and income, and contribute to the local tax base. No direct, indirect or cumulative adverse impacts would be anticipated.

3.3.7 Environmental Justice

Environmental justice analysis was developed following the requirements of:

- Executive Order 12898 ("Federal Actions to Address Environmental Justice in Minority Population and Low-Income Populations," 1994)
- "Department of Defense's Strategy on Environmental Justice" (24 March 1995).

Following the above directives, environmental justice analysis would identify and address, as appropriate, human health or environmental effects of the IER project on minority and low-income populations. The methodology to accomplish this includes identifying low-income and minority populations within the study area by demographic analysis followed by drive-by surveys.

A series of community-focused public meetings is currently on-going as an outreach effort to explain the proposed 100-year level of construction activities to any interested parties. The dates and times for these public meetings are being posted to the calendar on our website at www.nolaenvironmental.com.

Census Block Group statistics from the 2000 Census and Environmental Systems Research Institute (ESRI) estimates were utilized for environmental justice data analysis.

Detailed discussion of demographic and income data along with pertinent maps, tables and photographs are available and would be included in the CED and on the website www.nolaenvironmental.gov.

3.3.7.1 Existing Conditions Pertaining to Environmental Justice

According to the U.S. Census 2000 survey, the population within the one-mile radius of IER # 14 has a substantial minority population (45%) but is not considered to be a minority community. In terms of income, the poverty rate is within the range of parish and state poverty rates. Therefore, the area would not be considered a low-income community. According to 2007 estimates, the area surrounding the project's footprint is now a minority community, with approximately 43% African-American/Black, 4% Asian, and 5% Hispanic population. The poverty rate within the IER # 14 area has likely not increased significantly from 2000 to 2007, with the percentage of households earning below $15,000 per year comparable to parish and state figures. These statistics are estimates, and are not comprehensive due to the limitations of available data. Any additional data will be addressed in the CED. Based on observational surveys conducted

in October 2007, there were no obvious signs of poverty within the study area that would alter the ESRI estimates.

While the area within a one-mile radius of the project's footprint is estimated to be a minority area, and thus subject to environmental justice considerations pertaining to minority populations, the project has been designed to avoid all impacts to nearby residences. The proposed action will have no disproportionate impact to a minority or low-income community.

Table 14: Minority and Low-Income Population in Project Area

	IER 14 Project Area		Jefferson Parish		Louisiana	
	Number	Percentage	Number	Percentage	Number	Percentage
Minority Population, 2000	27,308	45.0%	160,643	35.2%	1,689,422	37.8%
Estimated Minority Population, 2007	33,124	53.9%	193,331	44.1%	1,741,453	39.8%
Persons living below the Poverty Line, 2000	10,744	17.7%	22,268	12.6%	851,113	19.6%
*Estimated households earning less than $15,000 per year, 2007	3,520	17.1%	25,751	15.2%	351,703	21.4%
*Poverty data not available for census block groups in 2007; analysis used $15,000 as threshold due to poverty thresholds reported by the U.S. Dept. of Health and Human Services for 2007, factoring average household size.						

3.3.7.2 Discussion of Impacts

3.3.7.2.1 No Action

Under the no action alternative, maintenance of currently authorized levels of protection would continue, but would not provide the greater protection of the 100-year level of protection as in the proposed plan.

3.3.7.2.2 Proposed Action for all Reaches

Direct Impacts

Under the proposed action, the levee enlargement will be carried out primarily within the existing ROW. Additional ROW is required for reach WBV-14b and WBV-14e; however, the area immediately around that reach is uninhabited. There would be no direct impacts on low-income and minority communities near the expanded levee reaches, including the Orleans Village and Estelle areas.

Indirect Impacts

There would be some minor indirect impacts related to noise and fugitive dust dispersion due to the proximity of the construction of the levee to residences in the area.

Cumulative Impacts

The impacts caused by the proposed and alternative actions for all reaches would have minor cumulative effects on minority and low-income communities.

3.4 HAZARDOUS, TOXIC, AND RADIOACTIVE WASTE

3.4.1 Existing Conditions:

Under Engineer Regulation (ER) 1165-2-132 the reasonable identification and evaluation of Hazardous, Toxic, and Radioactive Waste (HTRW) contamination within a proposed area of construction is required. ER 1165-2-132 identifies our HTRW policy to avoid the use of project funds for HTRW removal and remediation activities. Costs for necessary special handling or remediation of wastes (e.g., Resource Conservation and Recovery Act (RCRA) regulated), pollutants and other contaminants, which are not regulated under the Comprehensive Environmental Response, Compensation, and Liability Act (CERCLA), would be treated as project costs if the requirement is the result of a validly promulgated Federal, state or local regulation.

An ASTM E 1527-05 Phase I Environmental Site Assessment (ESA) was completed for the project area on 27 March 2008. A copy of the Phase I ESA will be maintained on file at CEMVN. The Phase I ESA documented the Recognized Environmental Conditions (REC) for the project area. If a REC cannot be avoided, due to the necessity of construction requirements, the CEMVN may further investigate the REC to confirm presence or absence of contaminants, actions to avoid possible contaminants, such as removing contaminated soils, and if local, state or Federal coordination is required. Because CEMVN plans to avoid RECs, and plans to work mainly within the previously established ROW, the probability of encountering HTRW in the project area is very low.

3.4.2 Discussion of Impacts

3.4.2.1 No Action

Under the no action alternative, maintenance of currently authorized levels of protection would continue. However, the 100-year level of protection would not be provided. Significant flooding can result in the mobilization and dispersion of HTRW from businesses, residences, as well as buried materials. Hurricane damage clean up experience has shown that vast quantities of debris and increasingly hazardous materials are dispersed into the terrestrial and aquatic environment when large-scale flooding occurs.

3.4.2.2 Proposed Action for all Reaches

Direct, Indirect and Cumulative Impacts

Under the proposed and alternative actions, the 100-year level of protection would be constructed. Because no specific HTRW concerns that could not be avoided or removed were identified from previous site investigations, no direct, indirect, or cumulative effects from HTRW would result from implementing the preferred alternative. However, the potential to create HTRW materials during the construction process is always a possibility. Storage, fueling, and lubrication of equipment and motor vehicles associated with the construction process would be conducted in a manner that affords the maximum protection against spill and evaporation. Fuel, lubricants, and oil would be managed and

stored in accordance with all Federal, state, and local laws and regulations. Used lubricants and used oil would be stored in marked corrosion-resistant containers and recycled or disposed in accordance with appropriate requirements. The construction contractor would be required to develop a Spill Control Plan.

In the event of an unplanned discovery of HTRW materials during construction, work that could affect the contaminated materials would be stopped and appropriate notification and coordination would be completed. Investigations would be conducted to characterize the nature and extent of the contamination and establish appropriate resolution.

4.0 CUMULATIVE IMPACTS

NEPA requires a Federal agency to consider not only the direct and indirect impacts of a proposed action, but also the cumulative impact of the action. Cumulative impact is defined as the "the impact on the environment which results from the incremental impact of the action when added to other past, present, and reasonably foreseeable future actions regardless of what agency (Federal or non-Federal) or person undertakes such other actions (40 CFR §1508.7)." Cumulative impacts can result from individually minor but collectively significant actions taking place over a period of time.

As indicated previously, in addition to this IER, the CEMVN is preparing a draft CED that will describe the work completed and the work remaining to be constructed. The purpose of the draft CED will be to document the work completed by the USACE on a system-wide scale. The draft CED will describe the integration of individual IERs into a systematic planning effort. Additionally, the draft CED will contain updated information for any IER that had incomplete or unavailable data at the time it was posted for public review. Overall cumulative impacts and future operations and maintenance requirements will also be included. The discussion provided below describes an overview of other actions, projects, and occurrences that may contribute to the cumulative impacts previously discussed.

Table 15: GNOHSDRRS Impacts and Compensatory Mitigation to be Completed

IER	Parish		Non-wet BLH (acres)	Non-wet BLH AAHUs	BLH (acres)	BLH AAHUs	Swamp (Acres)	Swamp AAHUs	Marsh (Acres)	Marsh AAHUs	EFH (Acres)
1: LPV, La Branche Wetlands Levee	St. Charles	Protected Side	-	-	-	-	137.05	73.99	-	-	-
		Flood Side	-	-	11.33	8.09	143.57	110.97	-	-	-
2: LPV, West Return Floodwall	St. Charles, Jefferson	Protected Side									
		Flood Side					33.40	9.00			
3: LPV, Lakefront Levee	Jefferson	Protected Side									
		Flood Side									26
14: WBV, Westwego to Harvey Levee	Jefferson	Protected Side			45.00	30.00					
		Flood Side			45.50	18.58	29.75	17.02			
15: WBV, Lake Cataouatche Levee	Jefferson	Protected Side	-	-	23.50	6.13	-	-	-	-	-
		Flood Side	-	-	3.600	1.35	-	-	-	-	-
18: GFBM	Jefferson, Plaquemines, St. Charles	Protected Side	-	-	-	-	-	-	-	-	-
		Flood Side	-	-	-	-	-	-	-	-	-
18: GFBM	Orleans	Protected Side	226.00	68.79	-	-	-	-	-	-	-
		Flood Side	-	-	-	-	-	-	-	-	-
18: GFBM	St. Bernard	Protected Side	74.30	43.59	-	-	-	-	-	-	-
		Flood Side	-	-	-	-	-	-	-	-	-
19: CFBM	Hancock County, MS; Iberville; Orleans; Plaquemines; St. Bernard	Protected Side	-	-	-	-	-	-	-	-	-
		Flood Side	-	-	-	-	-	-	-	-	-
19: CFBM	Jefferson	Protected Side	-	-	-	-	-	-	-	-	-
		Flood Side	-	-	-	-	-	-	-	-	-
22: GFBM	Jefferson	Protected Side	157.76	89.64	-	-	-	-	-	-	-
		Flood Side	-	-	-	-	-	-	-	-	-
22: GFBM	Plaquemines	Protected Side	86.93	28.90	-	-	-	-	-	-	-
		Flood Side	-	-	-	-	-	-	-	-	-
23: CFBM	Hancock County, MS; Plaquemines; St. Bernard; St. Charles	Protected Side	-	-	-	-	-	-	-	-	-
		Flood Side	-	-	-	-	-	-	-	-	-
Totals		Protected Side	544.99	230.92	68.50	36.13	137.05	73.99	-	-	-
		Flood Side	-	-	60.43	28.02	206.72	136.99	-	-	-
		Both	544.99	230.92	128.93	64.15	343.77	210.98	-	-	-

- Not applicable to the IER or number impacted is 0
GFBM: Government Furnished Borrow Material/ CFBM: Contractor Furnished Borrow Material

Following Hurricane Katrina, it was recognized that portions of the levees and floodwalls that comprise the hurricane and storm damage reduction projects for WBV and New Orleans MSA were not constructed to authorized elevations, or had not been maintained to keep previously constructed structures at the authorized elevation. CEMVN is in the process of implementing construction projects to raise the hurricane protection levees to the authorized elevations.

In addition to ongoing construction to raise the floodwall and levee elevations to authorized levels, CEMVN has authority to provide the 100-year level of protection. This would be achieved by enlarging and raising levees, elevating and/or replacing floodwalls, and improving frontal protection to pump stations as deemed necessary within all reaches of the WBV and New Orleans MSA. This project includes the current project study area in the WBV. Levee improvements throughout the WBV would require substantial amounts of materials for construction and would fill some existing borrow pits in the current study area to facilitate levee enlargement. New borrow pits would be required to provide adequate material in proximity to proposed flood protection projects. The new borrow pits are being evaluated in IERs # 18, # 19, # 22, # 23, # 25, and # 26. All of the projects providing the 100-year level of protection are currently in the planning and design stages and separate IERs for individual projects would address the corresponding environmental and socioeconomic impacts for NEPA compliance.

The CEMVN is also involved in other regional flood protection and coastal restoration planning efforts. The Louisiana Coastal Protection and Restoration (LACPR) effort involves comprehensive planning for protection and restoration for all of coastal Louisiana. The CEMVN, along with other Federal and state agencies, participates in coastal restoration projects through the Coastal Wetlands Planning, Protection and Restoration Act (CWPPRA). This Act includes specific prioritized restoration projects implemented coast-wide by the Louisiana Department of Natural Resources (LDNR), Coastal Restoration Division in cooperation with Federal agencies.

In the WBV, the proposed levee construction, floodwall replacements, and other structure constructions would have a temporary adverse cumulative impact on noise and transportation in the area. The construction activities, transportation of the large quantities of materials for construction, and construction equipment would lead to increased traffic volumes in the area and would contribute to noise pollution. According to a 2007 presentation titled “Hurricane Protection System Borrow” by the CEMVN, an estimated amount of 19.74 million cubic yards of material would be needed for the proposed actions to provide the 100-year level of protection to the WBV in Jefferson Parish. The total number of trips to transport materials required for construction and the construction schedules for each reach are being determined. Numerous sensitive receptors would be exposed to noise levels exceeding 65 dBA during the proposed construction. However, the traffic conditions and noise levels would return to normal levels after the construction activity is complete. There would also be some adverse impacts on bottomland hardwood forests, cypress-tupelo swamps, fisheries and aquatic organisms, wildlife, and air quality in the region associated with noise levels, emissions issues, and disturbance and loss of habitat due to the proposed levee and floodwall improvements.

The proposed action would have cumulative beneficial impacts to the socioeconomics of the region. The GNOHSDRRS would be improved to provide additional hurricane, storm, and flood damage reduction to minimize the threat of inundation of infrastructure due to severe tropical storm events. Improved hurricane, storm, and flood damage reduction measures benefit all property owners, regardless of income or race, increases

confidence, reduces insurance rates, and allows for development and re-development of existing urban areas.

Table 15 shows the cumulative compensatory mitigation that will be completed by the CEMVN. This table will be updated as potential impacts are assessed in forthcoming IERs.

Cumulative impacts for the actions considered in all of the IERs will be incorporated into the CED.

5.0 SELECTION RATIONALE

On the basis of the assessment of potential environmental impacts presented in this IER and the evaluation of feasibility based on the engineering effectiveness, economic efficiency, and environmental and social acceptability criteria, the proposed action for each reach is selected and is environmentally preferred. None of the proposed actions preclude any future enhancements to the GNOHSDRRS

The CEQ regulations for implementing NEPA require that the Record of Decision (ROD) for an environmental impact statement specify "the alternative or alternatives which were considered to be environmentally preferable" (40 CFR §1505.2(b)). This alternative has generally been interpreted to be the alternative that would promote the national environmental policy as expressed in NEPA's Section 101 (CEQ's "Forty Most-Asked Questions," 46 Federal Register, 18026, March 23, 1981). Ordinarily, this means the alternative that causes the least damage to the biological and physical environment; it also means the alternative that best protects, preserves, and enhances historic, cultural, and natural resources.

The proposed action for each reach represented in IER # 14 presents an environmentally preferable selection to other alignment alternatives that would have had greater effects on bottomland hardwood forests, cypress-tupelo swamps, fisheries and aquatic habitat, wildlife, socioeconomic issues, environmental justice (i.e., flood side shift or protected side shift outside of ROW) or that would have required significant demolition and reconstruction to maintain the proposed 100-year level of protection (i.e., floodwalls to replace levees). Taking no action, although avoiding the direct effects from construction of the 100-year level of protection, predictably and repeatedly leads to indirect effects from large-scale flooding and the associated clean up.

6.0 COORDINATION AND CONSULTATION

6.1 PUBLIC INVOLVEMENT

Extensive public involvement has been sought in preparing this IER. The projects analyzed in this IER were publicly disclosed and described in the Federal Register on 13 March 2007 and on the website www.nolaenvironmental.gov. Scoping for this project was initiated on 12 March 2007 through advertisements and public notices placed in USA Today and The New Orleans Times-Picayune. Nine public scoping meetings were held throughout the New Orleans Metropolitan area to explain the scope and process of the Alternative Arrangements for implementing NEPA between 27 March and 12 April 2007, after which a 30-day scoping period was open for public comment submission. Additionally, CEMVN has continued to host monthly public meetings to keep the stakeholders advised of project status. The public has been able to provide verbal

comments during the meetings and written comments at any time in person, by mail, and via www.nolaenvironmental.gov website.

Comments were received at a public meeting on 19 July 2007, at the St. Bonaventure Catholic Church in Avondale, LA. The public concern that evening was focused on getting clarification regarding the schedule for completion of the ongoing levee work, the schedule for construction to the new authorized elevation, and how the alignment would intersect Hwy 90 at the western end. Additional questions posed were related to sources of borrow material for levee construction and the extent of storm surge reduction due to the wetlands near Lake Cataouatche.

At a public meeting held on 19 September 2007, at Westwego City Hall, Westwego, the community members expressed their concerns about the following:

- Lack of better models to address coastal restoration and wetlands preservation
- GNOHSDRRS concentrating more on the levee construction and not on coastal restoration and wetland restoration and preservation
- Impacts to the Bayou aux Carpes Section 404(c) site would be of great concern due to its historical and cultural value
- Relationship between the 100-year level of protection and categories of storms (1-5) with respect to the level of protection that needs to be provided
- Criteria for 100-year level of protection and recent storm data incorporation into the criteria and models
- Interim protection for the area from hurricanes and floods before the entire levee system is brought up to the 100-year level of protection
- General concerns about floodwalls being replaced

Since this project includes unavoidable adverse impacts to jurisdictional wetlands under Section 404 of the Clean Water Act, a 404 public notice was made available to the public and other interested parties on the www.nolaenvironmental.gov website. The 404 public notice was advertised for the 30-day period of 10 March – 9 April 2008.

The draft IER is distributed to the public for a 30-day comment period. A public meeting discussing the draft IER will be held if requested by a stakeholder during the 30-day comment period. Any comments received during the comment period would be considered as part of the official record. After the 30-day comment period and the public meeting, if held, the CEMVN District Commander would review all comments received and would make a determination of whether the comments are substantive in nature. If the comments are not considered to be substantive, the District Commander will make a decision on the proposed action. This decision would be documented in the form of an IER Decision Record. If comments are determined to be substantive in nature, an addendum would be prepared and published for a 30-day public comment period. After the expiration of the public comment period, the District Commander will make a decision on the proposed action. The decision would be documented in the form of an IER Decision Record.

6.2 AGENCY COORDINATION

Preparation of this IER has been coordinated with appropriate Congressional, Federal, state, and local interests, as well as environmental groups and other interested parties. An interagency environmental team was established for this project in which Federal and state agency staff played an integral part in the project planning and alternative analysis phases of the project (members of this team are listed in appendix C). This interagency

environmental team was integrated with the CEMVN Project Delivery Team to assist in the planning of this project and to complete a mitigation determination of the potential direct and indirect impacts of the proposed action. Monthly meetings with resource agencies were also held concerning this and other CEMVN IER projects. The following agencies, as well as other interested parties, received copies of the draft IER:

U.S. Department of the Interior, Fish and Wildlife Service
U.S. Department of the Interior, National Park Service
U.S. Environmental Protection Agency, Region VI
U.S. Department of Commerce, NOAA National Marine Fisheries Service
U.S. Natural Resources Conservation Service
Louisiana Advisory Council on Historic Preservation
Governor's Executive Assistant for Coastal Activities
Louisiana Department of Wildlife and Fisheries
Louisiana Department of Natural Resources, Coastal Management Division
Louisiana Department of Natural Resources, Coastal Restoration Division
Louisiana Department of Environmental Quality
Louisiana State Historic Preservation Officer

The USFWS has reviewed the proposed action and in a Planning Aid letter dated 26 November 2007, stated that the USFWS is unaware of any known threatened or endangered species in the proposed project area. National Oceanic and Atmospheric Administration (NOAA) NMFS is currently reviewing the proposed action to ensure compliance with Section 305 of the Magnuson-Stevens Fishery Conservation and Management Act and the Fish and Wildlife Coordination Act.

The LDNR reviewed the proposed action for consistency with the Louisiana Coastal Resource Program (LCRP). The proposed action was found to be consistent with the LCRP, as per a letter dated 10 March 2008.

The Louisiana Department of Environmental Quality (LDEQ) reviewed the proposed action. CEMVN received Water Quality Certification by letter dated 4 March 2008. An Air Quality Certification is being coordinated with LDEQ through the 30-day public review period associated with IER # 14.

Section 106 of the National Historic Preservation Act, as amended, requires consultation with SHPO and Native American tribes. SHPO reviewed the proposed action and determined that it would not adversely affect any cultural resources by letter dated 23 January 2008. Eleven Federally-recognized tribes that have an interest in the region were given the opportunity to review and comment on the proposed action. Two tribes, the Choctaw Tribe of Oklahoma and the Chitimacha Tribe of Louisiana, replied that they have no objection to the proposed action.

The USFWS reviewed the proposed action in accordance with the Fish and Wildlife Coordination Act and prepared a draft Coordination Act Report for IER # 14 dated 20 May 2008. The USFWS also provided programmatic recommendations, in the “Draft Fish and Wildlife Coordination Act Report for the Individual Environmental Reports (IER), Public Law 109-234, Emergency Supplemental Appropriations Act for Defense, the Global War on Terror, and Hurricane Recovery, 2006 (Supplemental 4)” in November 2007. The uncertainties in the design of several projects prohibited a complete evaluation of the impacts to fish and wildlife species and the reporting responsibilities under Section 2(b) of the Fish and Wildlife Coordination Act (48 Stat. 401, as amended: 16 U.S.C. 661 et seq.). Therefore, a subsequent final supplemental report would be provided by the USFWS at a later date. The draft (programmatic) Fish

and Wildlife Coordination Act Report for the IERs dated November 2007 can be accessed through the www.nolaenvironmental.gov website.

The USFWS' programmatic recommendations applicable to this project would be incorporated into project design studies to the extent practicable, consistent with engineering and public safety requirements. The USFWS' programmatic recommendations, and CEMVN's response to them, are listed below:

Recommendation 1: To the greatest extent possible, situate flood protection so that destruction of wetlands and non-wet bottomland hardwoods are avoided or minimized.

CEMVN Response 1: The project would utilize the existing ROW footprint as much as practicable and minimize impacts to wetlands.

Recommendation 2: Minimize enclosure of wetlands with new levee alignments. When enclosing wetlands is unavoidable, acquire non-development easements on those wetlands, or maintain hydrologic connections with adjacent, un-enclosed wetlands to minimize secondary impacts from development and hydrologic alteration.

CEMVN Response 2: Not applicable.

Recommendation 3: Avoid adverse impacts to bald eagle nesting locations and wading bird colonies through careful design project features and timing of construction.

CEMVN Response 3: No known bald eagle nesting locations or wading bird colonies exist within the project area.

Recommendation 4: Forest clearing associated with project features should be conducted during the fall or winter to minimize impacts to nesting migratory birds, when practicable.

CEMVN Response 4: This recommendation would be considered in the design of the project to the greatest extent practicable.

Recommendation 5: The project's first Project Cooperation Agreement (or similar document) should include language that includes the responsibility of the local-cost sharer to provide operational, monitoring, and maintenance funds for mitigation features.

CEMVN Response 5: Corps Project Partnering Agreements (PPA) do not contain language mandating the availability of funds for specific project features, but require the non-Federal Sponsor to provide certification of sufficient funding for the entire project. Further, mitigation components are considered a feature of the entire project. The non-Federal Sponsor is responsible for Operation, Maintenance, Repair, Replacement and Rehabilitation (OMRR&R) of all project features in accordance with the OMRR&R manual that the Corps provides upon completion of the project.

Recommendation 6: Further detailed planning of project features (e.g., Design Documentation Report, Engineering Documentation Report, Plans and Specifications, or other similar documents) should be coordinated with the USFWS, NMFS, LDWF, USEPA, and LDNR. The USFWS shall be provided an opportunity to review and submit recommendations on all the work addressed in those reports.

CEMVN Response 6: Concur.

Recommendation 7: The CEMVN should avoid impacts to public lands, if feasible. If not feasible, the CEMVN should establish and continue coordination with agencies managing public lands that may be impacted by a project feature until construction of that feature is complete and prior to any subsequent maintenance. Points of contact for the agencies overseeing public lands potentially impacted by project features are: Kenneth Litzenberger, Project Leader for the USFWS' Southeast National Wildlife Refuges, and Jack Bohannan (985) 822-2000, Refuge Manager for the Bayou Sauvage National Wildlife Refuge (NWR), Office of State Parks contact Mr. John Lavin at 1-888-677-1400, National Park Service (NPS) contact Superintendent David Luchsinger, (504) 589-3882, extension 137 (david_luchsinger@nps.gov), or Chief of Resource Management David Muth (504) 589-3882, extension 128 (david_muth@nps.gov) and for the 404(c) area contact the previously mentioned NPS personnel and Ms. Barbara Keeler (214) 665-6698 with the USEPA.

CEMVN Response 7: The project would utilize the existing ROW footprint as much as practicable and would avoid adverse impacts to JLNHPP and the 404(c) area. Reach WBV-14e is the only reach within this IER that would extend past the existing ROW, but construction would not impact the 404(c) area.

Recommendation 8: If applicable, a General Plan should be developed by the CEMVN, the USFWS, and the managing natural resource agency in accordance with Section 3(b) of the FWCA for mitigation lands.

CEMVN Response 8: Concur.

Recommendation 9: If mitigation lands are purchased for inclusion within a NWR, those lands must meet certain requirements; a summary of some of those requirements is provided in Appendix A (refers to the Draft Fish and Wildlife Coordination Act Report). Other land-managing natural resource agencies may have similar requirements that must be met prior to accepting mitigation lands; therefore, if they are proposed as a manager of a mitigation site, they should be contacted early in the planning phase regarding such requirements.

CEMVN Response 9: Concur.

Recommendation 10: If a proposed project feature is changed significantly or is not implemented within one year of the date of the Endangered Species Act consultation letter, the USFWS recommended that the Corps reinitiate coordination to ensure that the proposed project would not adversely affect any federally-listed threatened or endangered species or their habitat.

CEMVN Response 10: Concur.

Recommendation 11: In general, larger and more numerous openings in a protection levee better maintain estuarine-dependent fishery migration. Therefore, as many openings as practicable, in number, size, and diversity of locations should be incorporated into project levees.

CEMVN Response 11: Not applicable.

Recommendation 12: Flood protection water control structures in any watercourse should maintain pre-project cross-sections in width and depth to the maximum extent practicable, especially structures located in tidal passes.

CEMVN Response 12: Not applicable.

Recommendation 13: Flood protection water control structures should remain completely open except during storm events. Management of those structures should be developed in coordination with the USFWS, NMFS, LDWF, and LDNR.

CEMVN Response 13: Not applicable.

Recommendation 14: Any flood protection water control structure sited in canals, bayous, or a navigation channel which does not maintain the pre-project cross-section should be designed and operated with multiple openings within the structure. This should include openings near both sides of the channel as well as an opening in the center of the channel that extends to the bottom.

CEMVN Response 14: Not applicable.

Recommendation 15: The number and siting of openings in flood protection levees should be optimized to minimize the migratory distance from the opening to enclosed wetland habitats.

CEMVN Response 15: Not applicable.

Recommendation 16: Flood protection structures within a waterway should include shoreline baffles and/or ramps (e.g., rock rubble, articulated concrete mat) that slope up to the structure invert to enhance organism passage. Various ramp designs should be considered.

CEMVN Response 16: Not applicable

Recommendation 17: To the maximum extent practicable, structures should be designed and/or selected and installed such that average flow velocities during peak flood or ebb tides do not exceed 2.6 ft per second. However, this may not necessarily be applicable to tidal passes or other similar major exchange points.

CEMVN Response 17: Not applicable.

Recommendation 18: To the maximum extent practicable, culverts (round or box) should be designed, selected, and installed such that the invert elevation is equal to the existing water depth. The size of the culverts selected should maintain sufficient flow to prevent siltation.

CEMVN Response 18: Concur.

Recommendation 19: Culverts should be installed in construction access roads unless otherwise recommended by the natural resource agencies. At a minimum, there should be one 24-inch culvert placed every 500 ft and one at natural stream crossings. If the depth of water crossings allow, larger-sized culverts should be used. Culvert spacing should be optimized on a case-by-case basis. A culvert may be necessary if the road is less than 500 ft long and an area would hydrologically be isolated without that culvert.

CEMVN Response 19: Concur.

Recommendation 20: Water control structures should be designed to allow rapid opening in the absence of an offsite power source after a storm passes and water levels return to normal.

CEMVN Response 20: Not applicable.

Recommendation 21: Levee alignments and water control structure alternatives should be selected to avoid the need for fishery organisms to pass through multiple structures (i.e., structures behind structures) to access an area.

CEMVN Response 21: Not applicable.

Recommendation 22: Operational plans for water control structures should be developed to maximize the cross-sectional area open for as long as possible. Operations to maximize freshwater retention or redirect freshwater flows could be considered if hydraulic modeling demonstrates that is possible and such actions are recommended by the natural resource agencies.

CEMVN Response 22: Not applicable.

Recommendation 23: CEMVN shall fully compensate for any unavoidable losses of wetland habitat or non-wet bottomland hardwoods caused by project features.

CEMVN Response 23: Concur.

Recommendation 24: Acquisition, habitat development, maintenance and management of mitigation lands should be allocated as first-cost expenses of the project, and the local project-sponsor should be responsible for operational costs. If the local project-sponsor is unable to fulfill the financial mitigation requirements for operation, then the CEMVN shall provide the necessary funding to ensure mitigation obligations are met on behalf of the public interest.

CEMVN Response 24: Construction of the project features are cost shared between the Government and the non-Federal sponsor. However, costs for operation, maintenance, repair, replacement, and rehabilitation will be the responsibility of the non-Federal sponsor.

Recommendation 25: Any proposed change in mitigation features or plans should be coordinated in advance with the USFWS, NMFS, LDWF, USEPA, and LDNR.

CEMVN Response 25: Mitigation for the impacts caused by this project would be coordinated through a mitigation IER. Any material changes to the mitigation plan in this IER would be coordinated in advance.

Recommendation 26: A report documenting the status of mitigation implementation and maintenance should be prepared every three years by the managing agency and provided to the CEMVN, USFWS, NMFS, USEPA, LDNR, and LDWF. That report should also describe future management activities, and identify any proposed changes to the existing management plan.

CEMVN Response 26: Concur.

The USFWS' project-specific recommendation in their Planning Aid Report, by letter dated 26 November 2007, and CEMVN's response to the recommendations, is listed below:

Recommendation 1: Mitigation for any impacts to bottomland hardwoods or swamps resulting from IER # 14 would be mitigated within the project area, specifically on the adjacent JLNHPP. Further details of impacts will be necessary to determine mitigation needs.

CEMVN Response 1: The mitigation IER is being coordinated with all natural resource agencies. All efforts will be made to provide in-kind mitigation within the same watershed as the project location.

The USFWS' project-specific recommendations in their draft FWCA report, by letter dated 20 May 2008, and CEMVN's response to the recommendations, is listed below:

Recommendation 1: See programmatic recommendation 1.

Recommendation 2: Ensure impacts and encroachment onto public lands are avoided. Unavoidable impacts and encroachments, when permissible by the appropriate managing agency, should be minimized and appropriately mitigated.

CEMVN Response 2: Concur.

Recommendation 3: See programmatic recommendation 3.

Recommendation 4: See programmatic recommendation 4.

Recommendation 5: See programmatic recommendation 5.

Recommendation 6: See programmatic recommendation 6.

Recommendation 7: See programmatic recommendation 7.

Recommendation 8: See programmatic recommendation 10.

Recommendation 9: Minimize the impacts of habitat and population fragmentation resulting from the increased elevation of Highway 3134 ramp by incorporation of animal passage features in the ramp. The locations and designs of the passage features should be coordinated with the Service and the JLNHPP.

CEMVN Response 9: Animal passage features (i.e., culverts in varying sizes) are being incorporated into the design of the Highway 3134 ramp.

Recommendation 10: The Corps shall fully compensate for any unavoidable losses of wetland habitat (65.6 AAHUs) caused by project features. Development and implementation of those plans should be done in concert with the Service and other resource agencies.

CEMVN Response 10: Concur.

7.0 MITIGATION

Mitigation for unavoidable impacts to the human and natural environment described in this and other IERs will be addressed in separate mitigation IERs. CEMVN has partnered with Federal and state resource agencies to form an interagency mitigation team that is working to assess and verify these impacts, and to look for potential mitigation sites in the appropriate hydrologic basin. This effort is occurring concurrently with the IER planning process in an effort to complete mitigation work and construct mitigation projects expeditiously. As with the planning process of all other IERs, the public will have the opportunity to give input about the proposed work. These mitigation IERs will, as described in section 1 of this IER, be available for a 30-day public review and comment period.

For the proposed action, a total of 120.25 acres have been identified that would require compensatory mitigation. Approximately 90.5 acres of bottomland hardwood forests and 29.75 acres of cypress-tupelo swamps comprise the total number of acres. Quantitative analysis utilizing existing methodologies for water resource planning has identified the acreages and habitat type for the direct or indirect impacts of implementing the proposed action.

On 30 August 2007, an interagency field trip was conducted to obtain raw field data for the IER # 14 project. The methodology being utilized in determining appropriate mitigation, which would include no net loss of wetland values, is the interagency Wetland Value Assessment (WVA). The WVA computes the Average Annualized Habitat Units (AAHUs) lost by project implementation. The AAHUs are converted to acres needed to meet the nation's no-net-loss of wetlands policy once the mitigation site is selected. Approximately 48.58 AAHUs of bottomland hardwoods and 17.02 AAHUs of cypress-tupelo swamps have been computed by the interagency team as appropriate mitigation requirements for IER # 14.

Two distinct habitats are represented within the boundaries of proposed construction impacts within IER # 14, namely bottomland hardwood forests and cypress-tupelo swamps. Bottomland hardwood forests of medium to high value are located within reaches WBV-14f, WBV-14d, and WBV-14e. Proposing actions within the existing ROW avoids and minimizes wetland impacts to the greatest extent practicable. Existing ROW areas are generally previously impacted, mowed, and maintained grassy areas that provide no food or shelter for fish and wildlife resources. Because the 100-year level of protection would require an expansion of the existing levee footprint, within the ROW, some impacts to bottomland hardwoods and aquatic impacts to existing borrow pits is unavoidable. Reach WBV-14e is planned to be constructed outside the existing ROW on the protected side. Although this expansion would impact medium to high quality bottomland hardwood wetlands, impacts to the 404(c) area are being avoided entirely. The 404(c) site is currently under legislation to be included in the JLNHPP. The proposed levee expansion project requires a footprint of area that would provide engineering stability and safety for operations and maintenance of the completed project.

Secondly, cypress-tupelo swamps of medium to high value are located within reach WBV-14b. These valuable wetlands are connected to the CIT tract, another area under legislation proposed to be included within the JLNHPP. As stated previously, the proposed levee expansion project requires a footprint that provides engineering effectiveness and safety.

A complementary comprehensive mitigation IER or IERs will be prepared documenting and compiling these unavoidable impacts and those for all other proposed actions within the GNOHSDRRS that are being analyzed through other IERs. Mitigation planning is being carried out for groups of IERs, rather than within each IER, so that large mitigation efforts could be taken rather than several smaller efforts, increasing the relative economic and ecological benefits of the mitigation effort.

This forthcoming mitigation IER will implement compensatory mitigation as early as possible. All mitigation activities will be consistent with standards and policies established in appropriate Federal and state laws, and USACE policies and regulations.

Table 15 shows the cumulative compensatory mitigation that will be completed by the CEMVN. This table will be updated as potential impacts are assessed in forthcoming IERs.

8.0 COMPLIANCE WITH ENVIRONMENTAL LAWS AND REGULATIONS

Construction of the proposed action would not commence until the proposed action achieves environmental compliance with all applicable laws and regulations, as described below.

Environmental compliance for the proposed action would be achieved upon coordination of this IER with appropriate agencies, organizations, and individuals for their review and comments; USFWS and NMFS confirmation that the proposed action would not adversely affect any T&E species or require completion of Endangered Species Act Section 7 consultation; LDNR concurrence with the determination that the proposed action is consistent, to the maximum extent practicable, with the LCRP; receipt of a Water Quality Certification from the State of Louisiana; public review of the Section 404(b)(1) Public Notice and signature of the Section 404(b)(1) Evaluation; coordination with the SHPO; receipt and acceptance or resolution of all Fish and Wildlife Coordination Act recommendations; receipt and acceptance or resolution of all LDEQ comments on the air quality impact analysis documented in the IER; and receipt and acceptance or resolution of all Essential Fish Habitat recommendations.

Executive Order (E.O.) 11988. E.O. 11988, Floodplain Management, addresses minimizing or avoiding adverse impacts associated with the base floodplain unless there are no practicable alternatives. It also involves giving public notice of proposed actions that may affect the base floodplain. The proposed action would not accelerate development of the floodplain for the following reasons: development of the study area is more closely related to access routes and the need for affordable housing space than flooding potential and conditions conducive for development were established initially when the area was leveed and forced drainage was initiated in the middle 1960s.

Executive Order 11990. E.O. 11990, Protection of Wetlands, has been important in project planning. It is acknowledged that a portion of the area enclosed by the existing levee consists of wetlands. However, by following the existing alignments and working in developed areas, there would be minimal direct adverse impacts to wetlands for this project. Any increased size of the interior borrow/drainage canal as a result of levee enlargement would result in increased capacity; however, this would have essentially no indirect effect on the rate of drainage from the basin. Increased pumping station capacities are not a part of this action.

Consistency with Coastal Zone Management (CZM) Program. CEMVN has determined that construction and maintenance of 100-year level of protection along the WBV, Westwego to Harvey Levee Project is consistent, to the maximum extent practicable, with the guidelines of the State of Louisiana's approved Coastal Zone Management Program. A CZM consistency determination, C20080048, was dated 10 March 2008. The consistency letter of approval from the LDNR completes the consistency requirements.

Clean Air Act. The original 1970 CAA authorized USEPA to establish NAAQS to limit levels of pollutants in the air. The USEPA has promulgated NAAQS for six criterion pollutants: sulfur dioxide (SO_2), nitrogen dioxide (NO_2), carbon monoxide (CO), ozone, lead, and particulate matter (PM-10). All areas of the United States must maintain ambient levels of these pollutants below the ceilings established by the NAAQS; any area that does not meet these standards is considered a "non-attainment" area (NAA). The

1990 Amendments require that the boundaries of serious, severe, or extreme ozone or CO non-attainment areas located within MSAs or Consolidated Metropolitan Statistical Areas (CMSAs) be expanded to include the entire MSA or CMSA unless the governor makes certain findings and the Administrator of the USEPA concurs. Consequently, all urban counties included in an affected MSA or CMSA, regardless of their attainment status, would become part of the NAA. The project is located in Jefferson Parish, which is classified as an attainment area; therefore NAAQS are not applicable to this project.

Clean Water Act. The Clean Water Act (CWA; 33 *U.S.C.* 1251-1387; Act of June 30, 1972, as amended) is a very broad statute with the goal of maintaining and restoring waters of the United States. The CWA authorizes water quality and pollution research, provides grants for sewage treatment facilities, sets pollution discharge and water quality standards, addresses oil and hazardous substances liability, and establishes permit programs for water quality, point source pollutant discharges, ocean pollution discharges, and dredging or filling of wetlands. The intent of the CWA's §404 program and it's §404(b)(1) "Guidelines" is to prevent destruction of aquatic ecosystems including wetlands, unless the action would not individually or cumulatively adversely affect the ecosystem.

Section 404(b)(1) guidelines were used to evaluate the discharge of dredged or fill material for adverse impacts to the aquatic ecosystem. The following actions would be taken to minimize the potential for adverse environmental impacts. The existing levee alignment would be followed in construction of the proposed levee. All sloped areas would be seeded. Non-forested wetlands, consisting of mown levee grasses or grazed pasture, were not mitigated because of their low value to fish and wildlife resources. The proposed project complies with the requirements of the guidelines. The LDEQ Water Quality Certification letter, JP 080213-04, dated 4 March 2008, completes the certification process.

Endangered Species Act. The Endangered Species Act (ESA; 16 *U.S.C.* 1531-1543; Pub. L. 93-205, as amended) was enacted in 1973 for the purpose of providing for the conservation of species which are in danger of extinction throughout all or a significant portion of their range. "Species" is defined by the ESA to mean either a species, a subspecies, or, for vertebrates *(i.e.,* fish, reptiles, mammals, etc.) only, a distinct population. No threatened or endangered species or their critical habitat would be impacted by the proposed action. The USFWS concurred with our determination in their letter dated 26 November 2007.

Fish and Wildlife Coordination Act. The Fish and Wildlife Coordination Act (16 *U.S.C.* 661-666c; Act of March 10, 1934, as amended) requires that wildlife, including fish, receive equal consideration and be coordinated with other aspects of water resource development. This is accomplished by requiring consultation with the USFWS and NMFS whenever modifications are proposed to a body of water and a Federal permit or license is required. This consultation determines the possible harm to fish and wildlife resources, as well as the measures that are needed to prevent the damage to and loss of these resources and to develop and improve the resources, in connection with water resource development. NMFS submits comments and recommendations to Federal licensing and permitting agencies and to Federal agencies conducting construction projects on the potential harm to living marine resources caused by the proposed water development projects, and submits recommendations to prevent harm. The USFWS provided the “Draft Fish and Wildlife Coordination Act Report for the Individual Environmental Reports (IER), Public Law 109-234, Emergency Supplemental Appropriations Act for Defense, the Global War on Terror, and Hurricane Recovery, 2006 (Supplemental 4)” in November 2007. To fulfill the responsibilities of the Fish and

Wildlife Coordination Act, the USFWS will provide a post-authorization final supplemental 2(b) report to the draft programmatic report. A draft project-specific Coordination Act Report was received from USFWS by letter dated 20 May 2008. A final report would be prepared after the 30-day public review period and all comments regarding USFWS trust resources have been resolved, and before a final IER has been completed.

Migratory Bird Treaty Act. The Migratory Bird Treaty Act of 1918 (MBTA) is the domestic law that affirms, or implements, the United States' commitment to four international conventions with Canada, Japan, Mexico, and Russia for the protection of shared migratory bird resources. The MBTA governs the taking, killing, possessing, transporting, and importing of migratory birds, their eggs, parts, and nests. The take of all migratory birds is governed by the MBTA's regulation of taking migratory birds for educational, scientific, and recreational purposes and requiring harvest to be limited to levels that prevent over-utilization. Section 704 of the MBTA states that the Secretary of the Interior is authorized and directed to determine if, and by what means, the take of migratory birds should be allowed and to adopt suitable regulations permitting and governing take. The MBTA prohibits the take, possession, import, export, transport, sale, purchase, barter, or offer for sale, purchase or barter, of any migratory bird, their eggs, parts, and nests, except as authorized under a valid permit (50 CFR §21.11). The USFWS addressed compliance with this Act in the "Draft Fish and Wildlife Coordination Act Report for the Individual Environmental Reports (IER), Public Law 109-234, Emergency Supplemental Appropriations Act for Defense, the Global War on Terror, and Hurricane Recovery, 2006 (Supplemental 4)" in November 2007. To fulfill the responsibilities of the Fish and Wildlife Coordination Act, the USFWS will provide a post-authorization final supplemental 2(b) report to the draft programmatic report.

National Environmental Policy Act. The National Environmental Policy Act (NEPA; 42 *U.S.C.* 4321-4347; Pub. L. 91-190, as amended) requires Federal agencies to analyze the potential effects of a proposed Federal action that would significantly affect historical, cultural, or natural aspects of the environment. It specifically requires agencies to use a systematic, interdisciplinary approach in planning and decision-making, to insure that environmental values may be given appropriate consideration, and to provide detailed statements on the environmental impacts of proposed actions including: (1) any adverse impacts; (2) alternatives to the proposed action; and (3) the relationship between short-term uses and long-term productivity. The agencies use the results of this analysis in their decision-making process. The preparation of this IER is a part of complying with NEPA.

National Historic Preservation Act. Congress established the most comprehensive national policy on historic preservation with the passage of the National Historic Preservation Act of 1966 (NHPA). In this Act, historic preservation was defined to include "the protection, rehabilitation, restoration and reconstruction of districts, sites, buildings, structures, and objects significant in American history, architecture, archaeology, or culture." The Act led to the creation of the National Register of Historic Places, a file of cultural resources of national, regional, state, and local significance. The act also established the Advisory Council on Historic Preservation (the Council), an independent Federal agency responsible for administering the protective provisions of the act. The major provisions of the NHPA are Sections 106 and 110. Both sections aim to ensure that historic properties are appropriately considered in planning Federal initiatives and actions. Section 106 is a specific, issue-related mandate to which Federal agencies must adhere. It is a reactive mechanism that is driven by a Federal action. Section 110, in contrast, sets out broad Federal agency responsibilities with respect to historic properties. It is a proactive mechanism with emphasis on ongoing management of

historic preservation sites and activities at Federal facilities. Coordination of this project with SHPO fulfills the requirements to comply with the NHPA, and the SHPO letter dated 23 January 2008 concludes this process.

9.0 CONCLUSIONS

9.1 FINAL DECISION

The proposed action consists of rebuilding the existing levee from Westwego to Harvey as part of the GNOHSDRRS on the west bank of the Mississippi River to a 100-year level of protection. The CEMVN has assessed various alternatives to achieve this goal and has determined the following proposed actions for each reach:

- WBV-14c – a protected side shift to achieve 100-year protection. All work would take place within the existing ROW, but would have to shift slightly towards the protected side to accommodate the larger levee. Fronting protection improvements to the Westminster Pumping Station within the existing ROW would be implemented, as well as a floodwall at the utility crossing.

- WBV-14b – a flood side shift to achieve 100-year protection. All work would take place within the existing ROW, but would have to shift slightly towards the flood side to accommodate the larger levee. Fronting protection improvements to the Ames and Mount Kennedy Pumping Stations would be implemented. The improvements to the Ames Pumping Station would be within the existing ROW and the improvements to the Mount Kennedy Pumping Station would be partially outside of the existing ROW. Floodwalls at utility crossings would be implemented.

- WBV-14f – a flood side shift to achieve 100-year protection. All work would take place within the existing ROW, but would have to shift slightly towards the flood side to accommodate the larger levee. Floodwalls at utility crossings would be implemented.

- WBV-14d – approximately 7,008 feet of floodwall to replace the existing floodwall within this reach and achieve 100-year protection. All work would take place within the existing ROW. The existing floodgate at Hwy 45 would be replaced with a larger swing gate, and the ramp at Hwy 3134 would be elevated to provide a continuous line of protection.

- WBV-14e – a protected side shift to achieve 100-year protection. Approximately 200 ft of additional ROW on the protected side would be required to accommodate the relocation of the existing drainage canal at the levee toe. Culverts would be incorporated into the elevated Hwy 3134 design for animal passage.

The CEMVN has assessed the environmental impacts of the proposed action and has determined that the proposed action would have the following impacts:

- Short-term localized impacts would occur to wildlife and nearby residents from noise and decreased air quality from heavy equipment and trucks used during construction.
- The relocation of the drainage canal in reach WBV -14e would cause a temporary water quality disturbance.

- Short- and long-term localized impacts would occur to fisheries and aquatic organisms located within the project construction area.
- Permanent displacement of fish and temporary displacement of wading birds, waterfowl, or other wildlife presently located within approximately 25 acres of borrow pits would occur.
- Permanent adverse impacts to 90.5 acres of bottomland hardwood forests would occur.
- Permanent adverse impacts to 29.75 acres of cypress-tupelo swamps would occur.

9.2 PREPARED BY

The point of contact and responsible manager for the preparation of this IER is Bonnie Obiol, CEMVN. The address of the preparers is: U.S. Army Corps of Engineers, New Orleans District; Planning, Programs, and Project Management Division, CEMVN-PM; P.O. Box 60267; New Orleans, Louisiana 70160-0267. Table 16 lists the preparers of the various sections and topics in this IER.

Table 16: IER # 14 Preparation Team

Environmental Team Leader	Gib Owen, CEMVN
Environmental Manager	Bonnie Obiol, CEMVN
Project Manager	Michael Stack, CEMVN
Senior Project Manager	Julie Vignes, CEMVN
Review Team	Frank Lupo, CEMVN - Office of Counsel Rita Trotter, CEMVN - Office of Counsel
	Kip Runyon, CEMVS – Independent Technical Review
HTRW	J. Christopher Brown, CEMVN
Cultural Resources	Michael Swanda, CEMVN
Recreational Resources	Andrew Perez, CEMVN
Aesthetic Resources	Richard Radford, CEMVN
Environmental Justice	Edwin Lyon, CEMVN
Economics	Robert Lacy, CEMVN
Technical Editor	Jennifer Darville, CEMVN
Professional Engineer	Saradhi Balla, IMS Engineers
Project Engineer	Udayaphani Malladi, IMS Engineers
Graduate Engineer	Andrea Payton, IMS Engineers
Design Specialist	Shaun Bridgeman, IMS Engineers
Other Contributions	Judith S. Smith, HDR Inc. Jessica Grafton, HDR Inc. Lissa Lyncker, HDR Inc.

9.3 LITERATURE CITED

Apollonio, Heather, Mary Elizabeth Weed, Benjamin D. Maygarden, Ellen Wilmer, and Jill-Karen Yakubik, Earth Search, Inc., 2003. Cultural Resources Survey, Borrow Areas, New Westwego Pumping Station to Highway 45, Jefferson Parish, Louisiana. Submitted to U.S. Army Corps of Engineers, New Orleans District

Beavers, Richard C., 1982. Archaeological Site Inventory: Barataria Basin Marsh Unit-Core Area, Jean Lafitte National Historical Park, Jefferson Parish, Louisiana. Submitted to Jean Lafitte National Historical Park and Preserve, New Orleans.

Beavers, Richard C., Teresia R. Lamb and Gary B. DeMarcay, 1982. Cultural Resource Survey and Assessment, Level I Initial Planning for West Bank Hurricane Protection Levee, Jefferson Parish, Louisiana. Submitted to Gregory C. Rigamer and Associates, New Orleans.

Bureau of Economic Analysis, "Regional Economic Accounts". Accessed 23 August 2007 from http://www.bea.gov/regional/reis/

Energy Security Analysis, Inc., Spec Watch - ESAI's Fuel Specification Review, Issue 3, 2005. pg 2

Fair Housing Summit. River Center Exhibition Hall, Baton Rouge, Louisiana. 26 April 2007. Available at http://www.lhfa.state.la.us/downloads/aboutus/Final-Fair-Housing-Summit-01may07.pdf

Goodwin, R. Christopher, Stephen Hinks, William P. Athens, Paul C. Armstrong, Sylvia L. Favret, Jennifer A. Cohen, and James M. Wojtala, R. Christopher Goodwin and Associates, Inc., 1989. Cultural Resources Investigations of the West Bank Hurricane Protection Project, Jefferson Parish, Louisiana. Submitted to U.S. Army Corps of Engineers, New Orleans District.

Google Maps, Location of IER 14 and Jean Lafitte Park, 2007. Accessed 2 September 2007 from http://maps.google.com

Gulf Reconstruction Bulletin, 29 August 2006. Accessed 20 August 2007 from http://www.bakerdonelson.com/GulfCoastReconstruction.aspx?NodeID=1135

Insurance Information Institute, 2007, Hurricane Insurance Fact Sheet. Accessed from http://www.iii.org/media/research/hurricanefactsheet

Intergovernmental Panel on Climate Change (IPCC). 2001. IPCC Third Assessment Report: Climate Change 2001. Webpage at: www.ipcc.ch/ipccreports/assessments-reports.htm

Kent, Joshua D., Louisiana Hurricane Impacts, May 2006. Louisiana Geographic Information Center at http://lagic.lsu.edu/lgisc/publications/2005/LGISC-PUB-20051116-00_2005_HURRICANE_ATLAS.pdf

Kidder, Tristram R., Earth Search, Inc., 1995. Archaeological Data Recovery at 16JE218, Jefferson Parish, Louisiana. Submitted to U.S. Army Corps of Engineers, New Orleans District.

Kindinger, Jack L., U.S. Geological Survey, 2002. Subsidence and Sea-Level Rise in Southeastern Louisiana: Implications for Coastal Management and Restoration, Southeastern Louisiana Subsidence Project at http://coastal.er.usgs.gov/LA-subsidence/

Louisiana Department of Environmental Quality, Personal Correspondence and conversations for Jefferson Parish specific Input Data for NONROAD model.

Louisiana Speaks Long-Term Community Recovery Planning, Jefferson Parish- Disaster Impact and Needs Assessment at: http://www.louisianaspeaks-parishplans.org/IndParishHomepage_BaselineNeedsAssessment.cfm?EntID=8

Maygarden, Benjamin D., Mary Elizabeth Weed, Rhonda Smith, and Jill-Karen Yakubik, Earth Search, Inc., 2003. Assessment of Historic Landscape, Highway 45 Borrow Pit, Jefferson Parish, Louisiana. Submitted to U.S. Army Corps of Engineers, New Orleans District.

Mid-Atlantic Regional Air Management Association, 20 December 2004, Fugitive Dust Construction Area Source Category Calculation Methodology Sheet available at http://marama.org/visibility/Calculation_Sheets/

National Weather Service Forecast Office, Last Modified on 4 June 2003 at http://www.srh.noaa.gov/lch/research/lalate20hur3.php

Nonoise.org, Protective Noise Levels, 1979. pp 24. Online link: http://www.nonoise.org/library/levels/levels.htm

Reagan, J., Grant, C. 2 May 1977. Special Report: Highway Construction Noise: Measurement, Prediction, and Mitigation. Federal Highway Administration, U.S. Department of Transportation. Available at http://www.fhwa.dot.gov/environment/noise/highway/hcn03.htm

Stach, Jeannette, 1996. Cultural Resources Survey of the Westwego to Harvey Canal Hurricane Protection Project from Orleans Village to Highway 45, Jefferson Parish, Louisiana. Submitted to the Louisiana Division of Archaeology, Baton Rouge.

Sullivan, Dana C. et al. 2003. Emission Estimation Methods For Mobile Sources and Agricultural Dust Sources in the Central States, Methods Document STI-903574-2610-MD. Prepared for The Central States Air Resource Agencies and The Central Regional Air Planning Association. pg: MD-4-4.

The Weather Channel. Accessed on 24 August 2007 from http://weather.yahoo.com/climo/USLA0489_f.html.

U.S. Census Bureau, The 2007 Statistical Abstract, The National Data Book, Geography & Environment: Weather Events and Climate, 2007a at www.census.gov/compendia/statab/tables/07s0384.xls

U.S. Census Bureau, American Community Survey 2006 at http://factfinder.census.gov/servlet/ACSSAFFFacts?_event=Search&_lang=en&_sse=on&_state=04000US22&_county=Jefferson%20Parish

U.S. Census Bureau State & County QuickFacts and The Katrina Index, 14 June 2007, Greater New Orleans Community Data Center in collaboration with The Brookings Institution Metropolitan Policy Program

U.S. Department of Agriculture, Soil Conservation Service, 1981. Soil Survey of Jefferson Parish, Louisiana

U.S. Department of Housing and Urban Development, Comprehensive Market Analysis Reports, New Orleans-Metairie-Kenner, Louisiana, Metropolitan Statistical Area. February 2006 at http://www.huduser.org/publications/pdf/CMAR_NewOrleansLA.pdf

U.S. Department of Labor, Bureau of Labor Statistics, Average Weekly Wages in Louisiana: First Quarter 2006, November 2006 at http://www.bls.gov/ro6/fax/la_qcew.htm

U.S. Department of Labor, U.S. Bureau of Labor Statistics, Issue in Labor Statistics, Recovery After Hurricane Katrina: Employment in the Gulf Coastal Area. Summary 07-01/ May 2007 at http://www.bls.gov/opub/ils/pdf/opbils57.pdf

U.S. Environmental Protection Agency, March 1974, Information on Levels of Environmental Noise Requisite to Protect Public Health and Welfare with an Adequate Margin of Safety prepared by Office of Noise Abatement and Control, EPA/ONAC 550/9-74-004, March 1974.

U.S. Environmental Protection Agency, 6 September 2007, National Clean Diesel Campaign at http://www.epa.gov/otaq/diesel/index.htm

U.S. Fish and Wildlife Service, 2003. Endangered and Threatened Wildlife Plants, Designation of Critical Habitat for the Gulf Sturgeon; Final Rule. 68 FR 13369 - 13495. 19 March 2003.

U.S. Parks at About.com 2007 at
http://usparks.about.com/od/nationalparklocator/l/blbestparks_la.htm

Wells, Douglas C., Coastal Environments, Inc., 2007. Management Summary: Cultural Resources Assessment of the Harvey-Westwego Segment (IER # 14), West Bank and Vicinity Hurricane Protection Levee, Jefferson Parish, Louisiana. Submitted to U.S. Army Corps of Engineers, New Orleans District.

Woodward, M., U.S. Army Corps of Engineers, 2007. Three Deep Mixing Applications for Task Force Guardian.

Yakubik, Jill-Karen, Benjamin Maygarden, Tristram R. Kidder, Shannon Dawdy, Kenneth Jones, Roger T. Saucier, Gayle Fritz, Allen Saltus, and Charlene Keck, 1996. Archaeological Data Recovery of the Camino Site (16JE223), A Spanish Colonial Period Site Near New Orleans, Louisiana. Submitted to the U.S. Army Corps of Engineers, New Orleans District.

10.0 APPENDICES

Appendix A

List of Acronyms and Definitions of Common Terms

Acronym	Definition
AAHU	Average Annualized Habitat Units
CAA	Clean Air Act
CAR	Coordination Act Report
CED	Comprehensive Environmental Document
CEMVN	Corps of Engineers, Mississippi Valley Division, New Orleans District
CEQ	Council on Environmental Quality
CERCLA	Comprehensive Environmental Response, Compensation, and Liability Act
CFR	Code of Federal Regulations
CIT	Commercial Investment Trust
CMSA	Consolidated Metropolitan Statistical Area
CWA	Clean Water Act
CWPPRA	Coastal Wetlands Planning, Protection and Restoration Act
CZM	Coastal Zone Management
EA	Environmental Assessment
EIS	Environmental Impact Statement
EL.	Elevation
E.O.	Executive Order
ER	Engineering Regulation
ESA	Endangered Species Act
ESA	Environmental Site Assessment
ESRI	Environmental Systems Research Institute
FONSI	Finding of No Significant Impacts
FT	Feet
GIWW	Gulf Intracoastal Waterway
GNOHSDRRS	Greater New Orleans Hurricane and Storm Damage Risk Reduction System
HEP	Habitat Evaluation Procedure
HPS	Hurricane Protection System
HTRW	Hazardous, Toxic, and Radioactive Waste
HWY	Highway
IER	Individual Environmental Report
IPCC	Intergovernmental Panel on Climate Change
JLNHPP	Jean Lafitte National Historical Park and Preserve-Barataria Preserve Unit
LACPR	Louisiana Coastal Protection and Restoration
LCRP	Louisiana Coastal Resource Program
LDEQ	Louisiana Department of Environmental Quality
LDNR	Louisiana Department of Natural Resources
LPV	Lake Pontchartrain and Vicinity
MBTA	Migratory Bird Treaty Act
MPH	Miles Per Hour

MSA	Metropolitan Statistical Area
NAA	Non-Attainment Area
NAAQS	National Ambient Air Quality Standards
NAVD 88	North American Vertical Datum of 1988
NEPA	National Environmental Policy Act of 1969
NFIP	National Flood Insurance Program
NHPA	National Historic Preservation Act
NOAA	National Oceanic and Atmospheric Administration
NPS	National Park Service
NWR	National Wildlife Refuge
OCS	Outer Continental Shelf
O&M	Operations and Maintenance
OMRR&R	Operation, Maintenance, Repair, Replacement and Rehabilitation
OSE	Other Social Effects
PA	Programmatic Agreement
P&G	Principles and Guidelines
PI	Plasticity Index
P.L.	Public Law
PPA	Project Partnering Agreements
RCRA	Resource Conservation and Recovery Act
REC	Recognized Environmental Condition
RED	Regional Economic Development
ROD	Record of Decision
ROW	Right-of-Way
SHPO	Louisiana State Historic Preservation Officer
SPH	Standard Project Hurricane
T&E	Threatened and Endangered Species
USACE	U.S. Army Corps of Engineers
USFWS	U.S. Fish and Wildlife Service
VE	Value Engineering
WBV	West Bank and Vicinity
WRDA	Water Resources Development Act
WVA	Wetland Value Assessment

Appendix B

Public Comment and Responses Summary

United States Department of the Interior

FISH AND WILDLIFE SERVICE
646 Cajundome Blvd.
Suite 400
Lafayette, Louisiana 70506

July 31, 2008

Colonel Alvin B. Lee
District Engineer
U.S. Army Corps of Engineers;
P.O. Box 60267
New Orleans, Louisiana 70160-0267

Dear Colonel Lee:

The U.S. Fish and Wildlife Service (Service) has reviewed the draft Individual Environmental Report (IER) West Bank and Vicinity (WBV), Westwego to Harvey Levee, Jefferson Parish, Louisiana, (IER14) transmitted to our office via a letter from Ms. Elizabeth Wiggins, Chief of your Environmental Planning and Compliance Branch. That study was conducted in response to Public Law 109-234, Emergency Supplemental Appropriations Act for Defense, the Global War on Terror, and Hurricane Recovery, 2006 (i.e., Supplemental 4). That law authorized the Corps of Engineers (Corps) to upgrade the Lake Pontchartrain and Vicinity and the West Bank and Vicinity hurricane protection projects to provide protection against a 100-year hurricane event. The Service submits the following comments in accordance with provisions of the National Environmental Policy Act (NEPA) of 1969 (83 Stat. 852; 42 U.S.C. 4321 et seq.) and the Endangered Species Act (ESA) of 1973 (87 Stat. 884, as amended; 16 U.S.C. 1531 et seq.).

General Comments

The IER is well-written and provides a good description of fish and wildlife resources in the project area and project impacts on those resources. Wetlands in the project area provide important habitat for several Federal trust species including wading birds, neotropical migrants, and resident and migratory waterfowl. Specific comments are provided in the following section.

Specific Comments

Page 14, paragraph 2.3.5 WBV 14e (V-line Levee) - The Service is pleased with the inclusion of an animal passage in the design of the Highway 3134 ramp and recommends that the Corps develop the design of that passage in coordination with the Service and the Jean Lafitte National Historical Park and Preserve (JLNHPP).

Page 28, paragraph 3.2.1.1 Existing Conditions, Second Paragraph – This paragraph describes bottomland hardwood impacts as a result of the floodside expansion of levee Reach 14f. The floodside expansion will impact borrow pits that contained previously constructed mitigation

TAKE PRIDE IN AMERICA

features. Those features were constructed to minimize the impact of those borrow pits to the adjacent JLNHPP. The Service recommends that the Corps continue to investigate alternative methods to avoid or further minimize the impacts to those mitigative features and the JLNHPP. Furthermore, the Service recommends any future design changes should ensure that expansion of the proposed impacts does not occur.

Page 31, paragraph 3.2.3 Bayou aux Carpes 404(c) Site – The current proposed plan avoids impacts to the Bayou aux Carpes 404(c) site; the Service recommends any future design changes that may occur continue to avoid impacts to this area.

The Service thus far does not object to the proposed hurricane protection features for IER14. Thank you for the opportunity to provide comments on the draft IER. If you have any questions regarding our comments, please contact David Walther at (337) 291-3122.

Sincerely,

James F. Boggs
Supervisor
Louisiana Field Office

cc: EPA, Dallas, TX
CEMVN-PM-RS
National Marine Fisheries Service, Baton Rouge, LA
LA Dept. of Wildlife and Fisheries, Baton Rouge, LA
LA Dept. of Natural Resources (CMD/CRD), Baton Rouge, LA

EPA Comments on Draft IER 14

To: Gib Owen,
Chief, Ecological Planning and Restoration Section
GNOHSDRRS Environmental Team Leader
Corps of Engineers, New Orleans District

The Environmental Protection Agency has reviewed Draft Individual Environmental Report (IER) 14 for the Westwego to Harvey Levee and we offer the following comments.

Reach WBV-14f

The Highway 45 to the V-Line Levee Floodwall section describes a preferred alternative with a flood side shift, which would impact a forested buffer zone between the levee and the existing borrow pits. We believe that work in this area should be focused on minimizing these impacts to the forested buffer zone, possibly by further analyzing alternatives for a protected side shift.

Mitigation of all impacts to the Jean Lafitte National Historic Park and Preserve is of utmost importance and a commitment to develop a thorough mitigation plan, with the consent of the National Park Service, should be clearly stated in the IER 14. Further, all unavoidable adverse impacts to habitats within the National Park resulting from the construction of the preferred alternative for IER 14 should be mitigated within the National Park.

Section 3.2.1.1, second paragraph, indicates that the wetland forests on the flood side of the levee are in a transitional phase and are predicted to succeed "from a swamp area to a bottomland hardwood forest, which would contain a few dominant cypress trees." Due to hydrologic conditions, it seems improbable that the area would transition to anything other than a more wet habitat. Please explain the basis for this conclusion.

Bayou aux Carpes 404(c) Area, Reach WBV-14e

We agree with the alternative analysis for reach WBV-14e that resulted in a protected side shift, thereby avoiding impacts to the Bayou aux Carpes 404(c) area. In addition, we request that all possible measures be employed to protect against any impacts to the Bayou aux Carpes 404(c) area during the construction process.

The discussion under Section 3.2.3 needs to be clarified, particularly with respect to misleading discussions of the authority under which EPA conducted a Clean Water Act Section 404(c) determination, and the authority under which it now stands. Accordingly, we offer the following as a substitute for that section, including a heading revision.

3.2.3 Bayou aux Carpes Wetlands Area

As originally authorized in the 1960's, the Harvey Canal-Bayou Barataria Levee Project, south of the V-line levee, included draining over 3,000 acres of the Bayou aux Carpes swamp for development purposes. In response to environmental concerns by EPA (which was considering a "veto" of the project under Section 404(c) of the Clean Water Act) and several public interest groups, the Corps of Engineers agreed to a modified project design in 1976. The project was modified by: 1) substituting floodgates for earthen closures at the mouths of the Bayou Des Familles, Bayou aux Carpes, and the Southern Natural Gas Pipeline Canal; 2) eliminating the land reclamation features; and 3) stipulating that, if a pumping station was needed for flood control, it be operated so as to maintain the integrity of the wetlands. Jefferson Parish agreed to the modification, but was unable to provide local assurances for the modified project due to State court litigation brought by area property owners. The

landowners also filed suit in federal court, requesting that the court order the Corps to complete the original project. In that lawsuit, the U.S. District Court (on remand from the U.S.Court of Appeals for the 5th Circuit), issued an order that stayed further proceedings and gave EPA a timeframe within which to decide whether or not to proceed with an action under Section 404(c) of the Clean Water Act. This provision of the Clean Water Act affords EPA the authority to designate areas in which discharges of dredged or fill material are prohibited. One reason the Corps of Engineers had ordered the Harvey Canal-Bayou Barataria Levee Project modified in 1976 was a threatened "veto" by EPA under that authority.

In October 1985, EPA exercised its authority under Section 404(c)of the Clean Water Act and, with three specific exceptions, prohibited discharges of dredged or fill material to wetlands in the Bayou aux Carpes site. This is an area bounded by the existing V-line levee, the Estelle Canal, Bayou Barataria, Bayou des Familles, and the Lafitte-Larose Hwy. The Federal District Court for the Eastern District of Louisiana subsequently found the EPA action, which rendered the original project infeasible, was consistent with the law and supported by the Agency's administrative record. The prohibition on discharges of dredged or fill material in this area remains in effect today.

In the 1980s, the Corps of Engineers proposed to construct a hurricane protection levee for the West Bank of the Parish. The preferred alternative would have resulted in the discharge of dredged or fill material to 59 acres of wetlands in the Bayou aux Carpes and to 257 acres of wetlands in the Jean Lafitte National Historic Park and Preserve. EPA rated that Draft EIS "environmentally unacceptable" based on impacts to the Bayou aux Carpes 404(c) area, inconsistency with a separate agreement with Jefferson Parish regarding wetland protection at the site, and other wetland and water quality impacts. As an alternative, EPA supported the "V-Levee North" alignment, which is the alignment that was subsequently adopted and constructed.

In addition, Section 3.2.3.1, Existing Conditions, should be revised to include a discussion of a unique habitat type in the Bayou aux Carpes 404(c) area, namely flotant marsh. For the last 14 years, EPA Region 6 has intermittently funded a team of ecologists lead by Dr. Charles Sasser, from the LSU Coastal Ecology Institute, to locate, map, and classify floating marshes in portions of coastal Louisiana. Prior to this work, it had been nearly five decades since any scientists had studied this marsh type. EPA interest stemmed from a lack of understanding about the habitat type and the associated management implications. Available evidence indicates that these types of marshes function quite differently from other marsh types. With regard to the Bayou aux Carpes 404(c) area, therefore, it would be critical that the hydrologic modeling for any new hurricane protection structures factor in the presence of floating marsh.

This same section in the Draft IER that describes the existing conditions of the Bayou aux Carpes 404(c) area should note that it exhibits naturally regenerating cypress trees. According to the 2005 Louisiana Governor's Science Working Group on Coastal Wetland Forest Conservation and Use, this area would be classified as Condition Class I: Sites with Potential for Natural Regeneration. The Science Working Group explained the exacting environmental requirements for successful natural regeneration of cypress and advocated placing priority on maintaining hydrologic conditions in these swamp forests. Section 3.2.2.1 (Cypress-Tupelo Swamps, Existing Conditions) should be clarified with respect to the presence of cypress in reach WBV-14e, within the Bayou aux Carpes 404(c) area.

The Bayou aux Carpes description under the Significant Resources section should also make note of the pending legislation to add it to the Jean Lafitte National Historic Park and Preserve. Although this is a legislative matter (and mentioned in the Mitigation section), it speaks to the existing environmental conditions, namely the high quality of the wetland habitat and the national value it exhibits.

Finally, statements regarding the quality of wetland forests on the protected side of reaches WBV-14e and WBV-14d (Section 3.2.1, third paragraph) should be corrected. The IER states that these forests are relatively pristine. However, this habitat has been significantly degraded over time due to hydrologic alterations.

Thank you in advance for your consideration of these comments. Please let me know if you have any questions or would like to discuss these comments in further detail.

Barbara Keeler
Coastal & Wetlands Planning Coordinator
EPA Region 6 (6WQ-EM)
1445 Ross Ave., Suite 1200
Dallas, TX 75202-2733
tel: 214-665-6698
fax: 214-665-6689
e-mail: keeler.barbara@epa.gov

Appendix C

Members of Interagency Environmental Team

Kyle Balkum	Louisiana Dept. of Wildlife and Fisheries
Agaha Brass	Louisiana Department of Natural Resources
Catherine Breaux	U.S. Fish and Wildlife Service
David Castellanos	U.S. Fish and Wildlife Service
Frank Cole	Louisiana Department of Natural Resources
John Ettinger	U.S. Environmental Protection Agency
Jeffrey Harris	Louisiana Department of Natural Resources
Richard Hartman	NOAA National Marine Fisheries Service
Jeffrey Hill	NOAA National Marine Fisheries Service
Christina Hunnicutt	U.S. Geologic Survey
Barbara Keeler	U.S. Environmental Protection Agency
Kirk Kilgen	Louisiana Department of Natural Resources
Tim Killeen	Louisiana Department of Natural Resources
Brian Lezina	Louisiana Dept. of Wildlife and Fisheries
David Muth	U.S. National Park Service
Clint Padgett	U.S. Geologic Survey
Jamie Phillippe	Louisiana Dept. of Environmental Quality
Molly Reif	U.S. Geologic Survey
Manuel Ruiz	Louisiana Dept. of Wildlife and Fisheries
Reneé Sanders	Louisiana Department of Natural Resources
Angela Trahan	U.S. Fish and Wildlife Service
David Walther	U.S. Fish and Wildlife Service
Patrick Williams	NOAA National Marine Fisheries Service

Appendix D

Figures

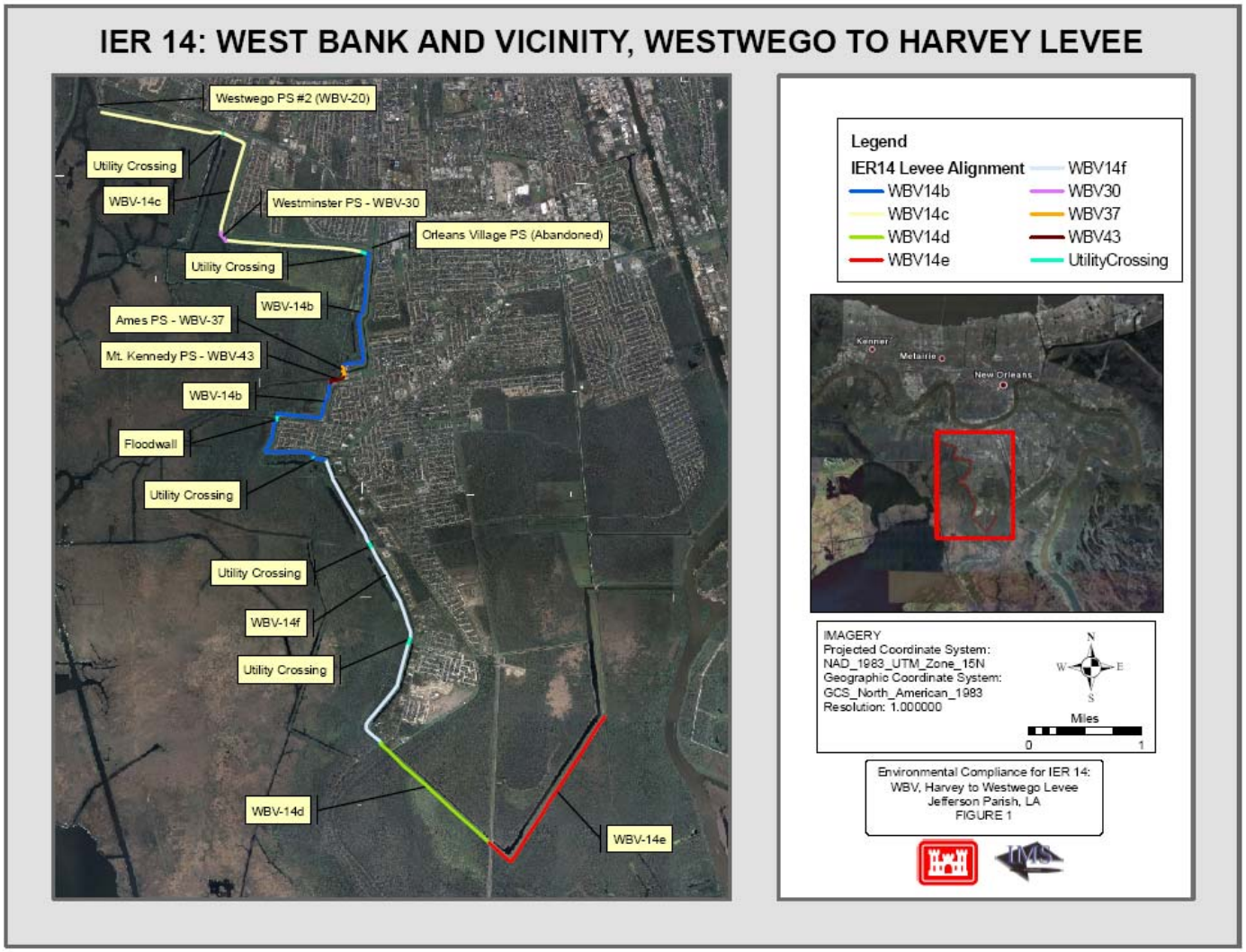

Figure 1: IER # 14 – Component Reaches and Pump Stations

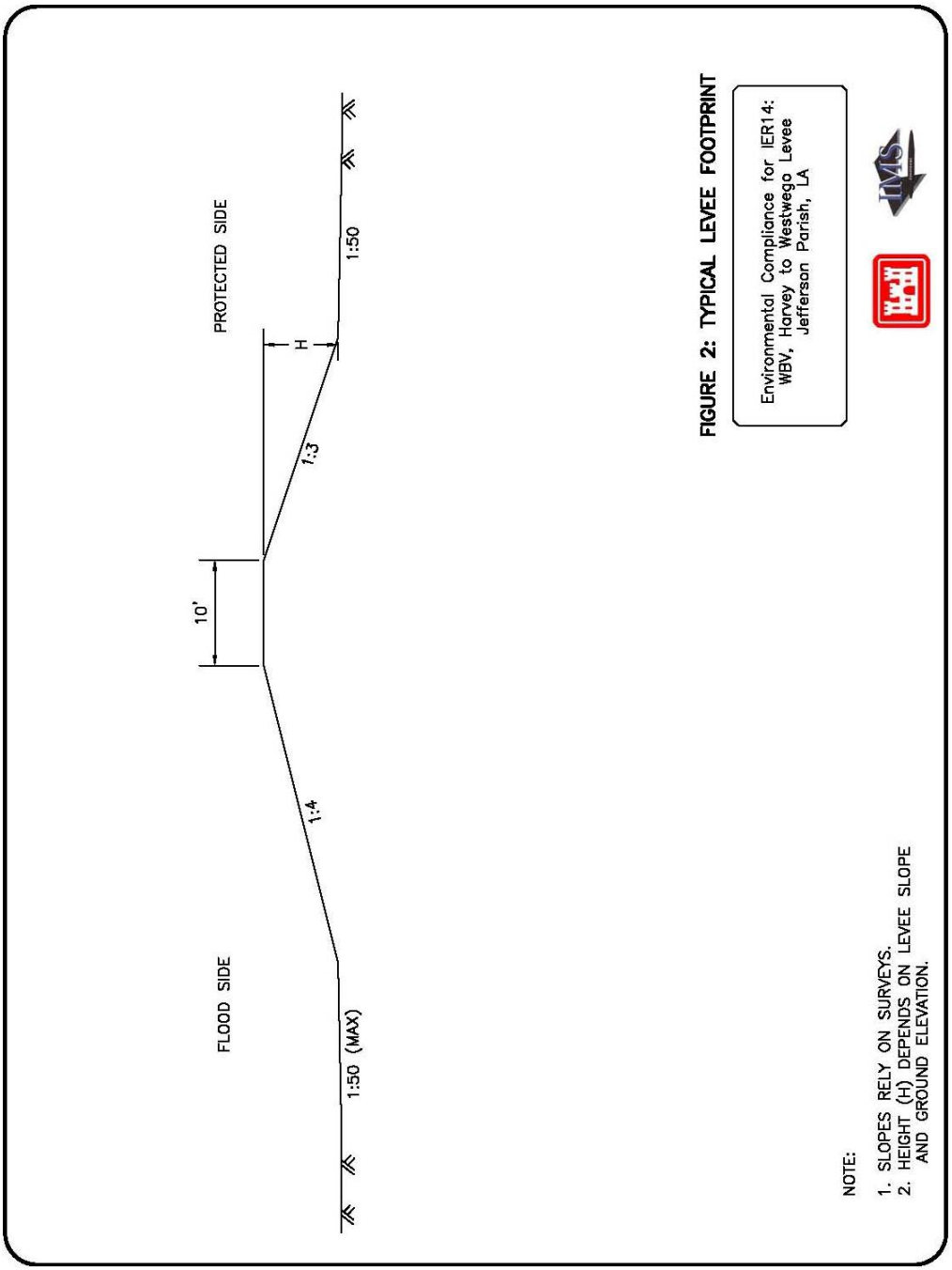

Figure 2: Typical Levee Footprint

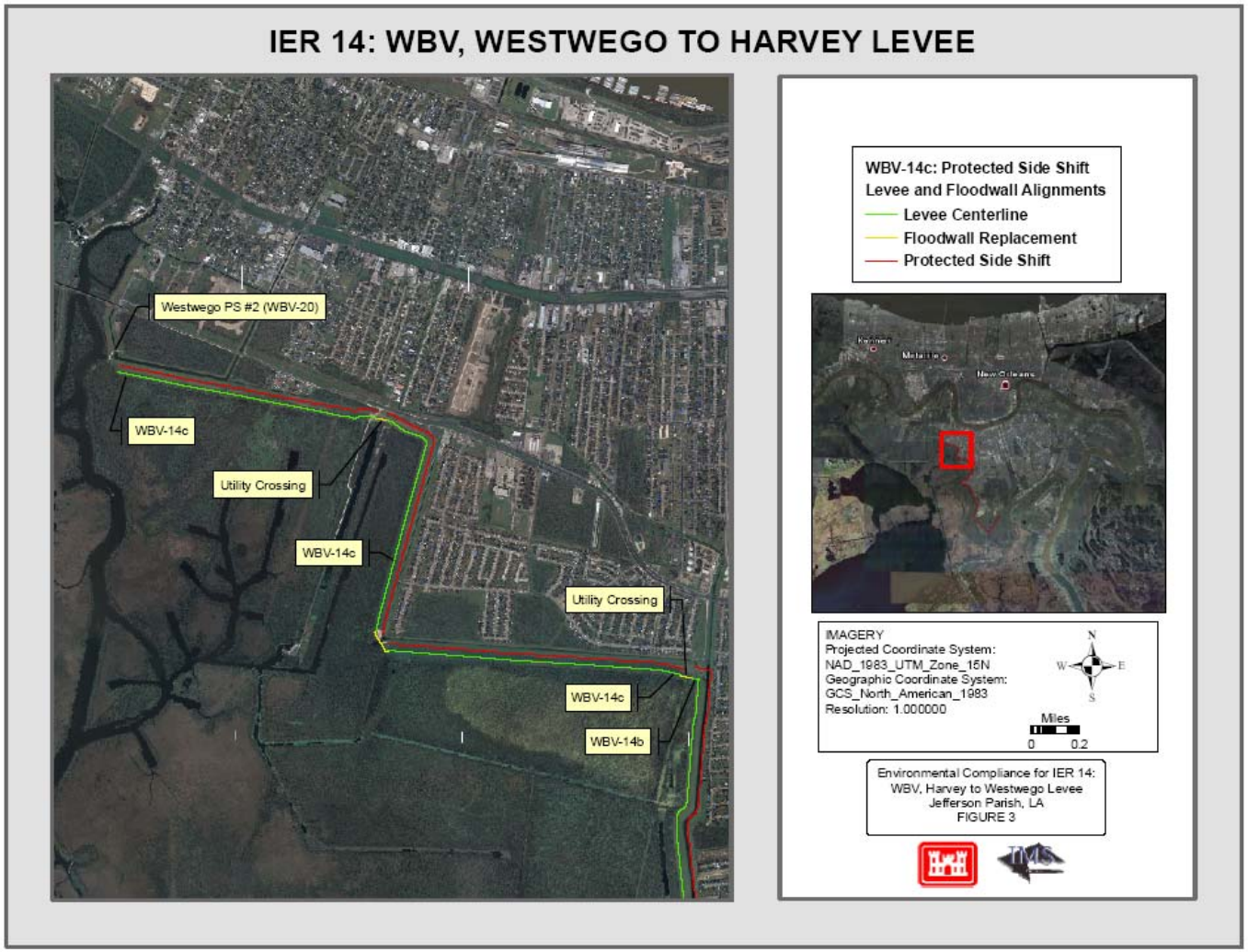

Figure 3: WBV-14c: Proposed Action

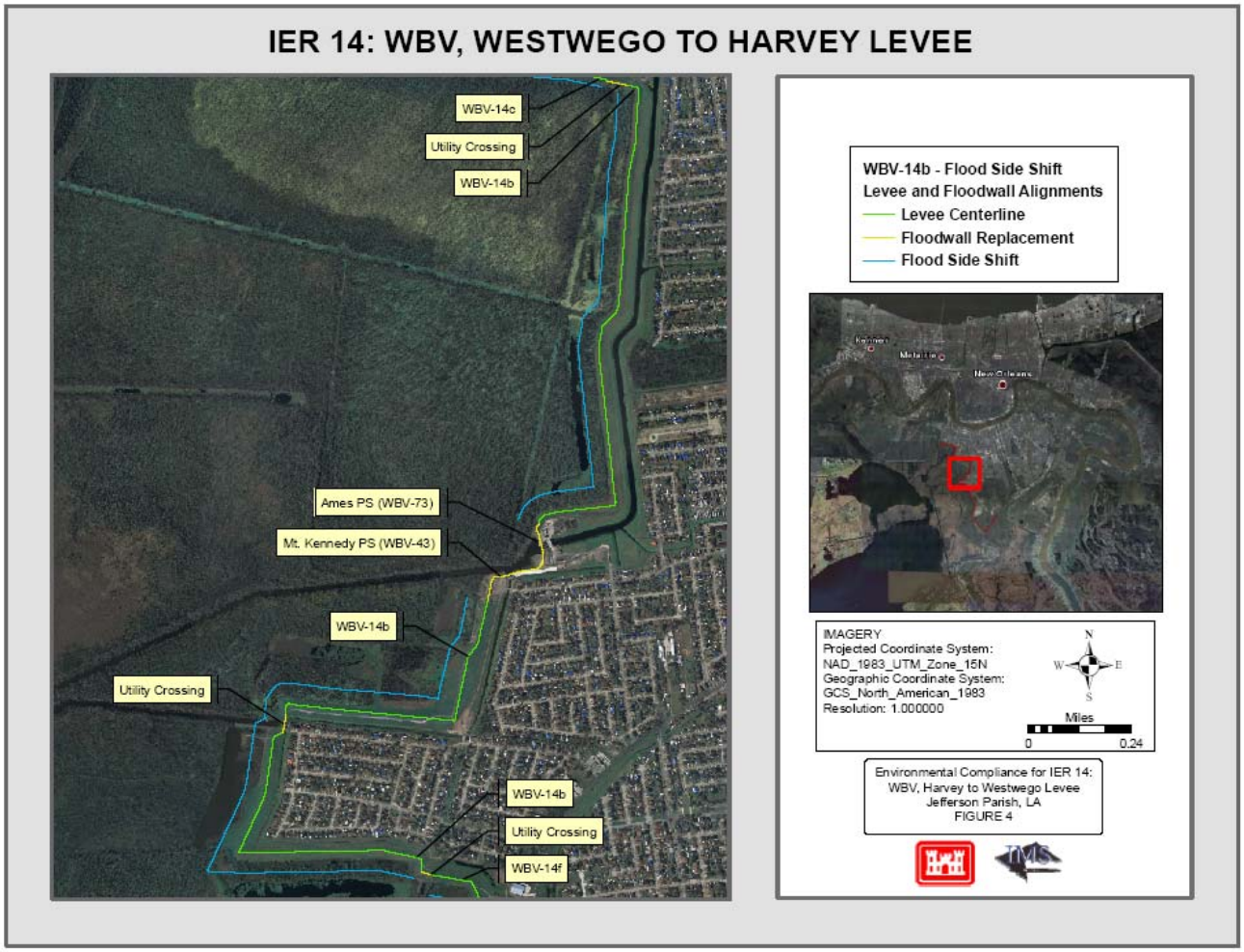

Figure 4: WBV-14b: Proposed Action

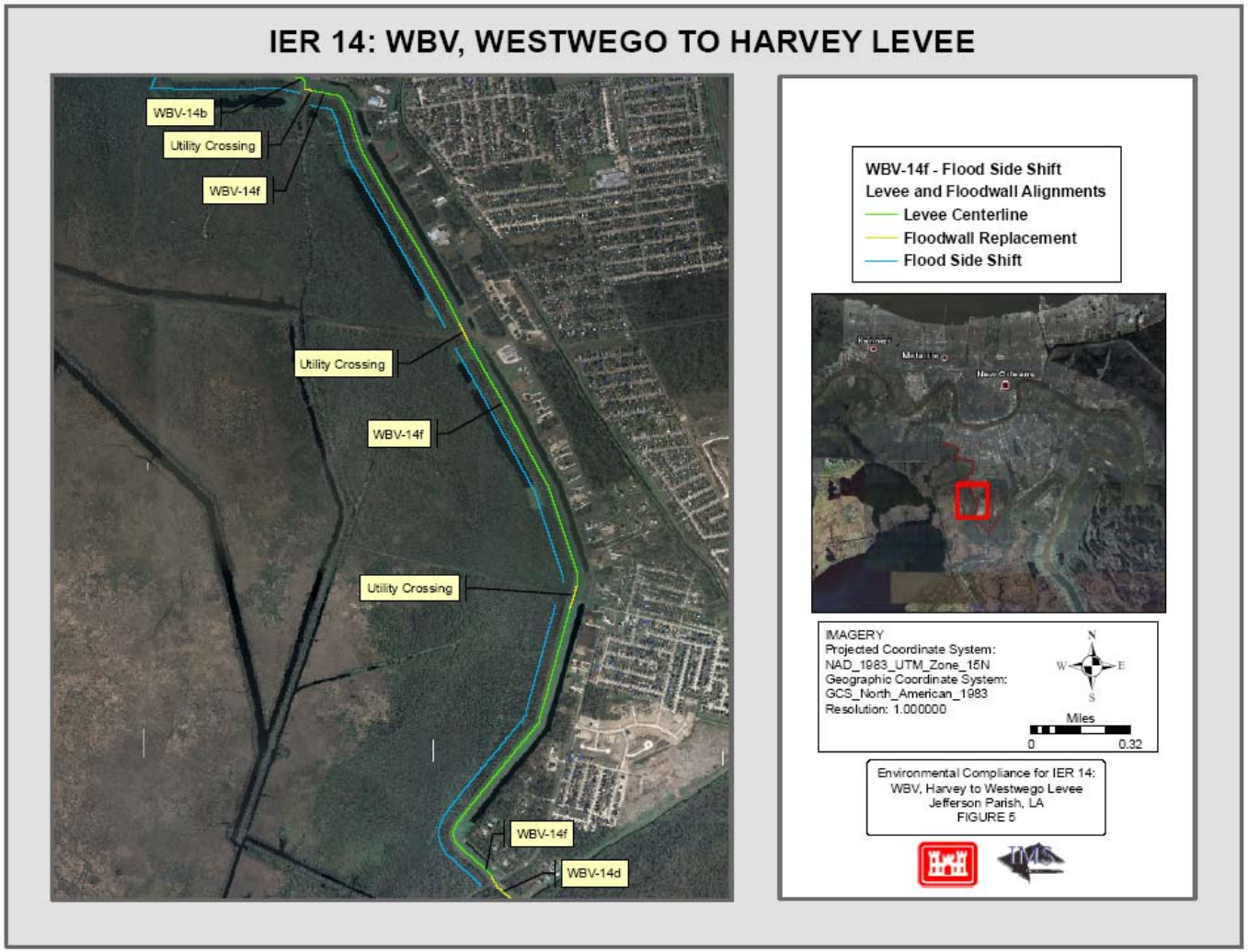

Figure 5: WBV-14f: Proposed Action

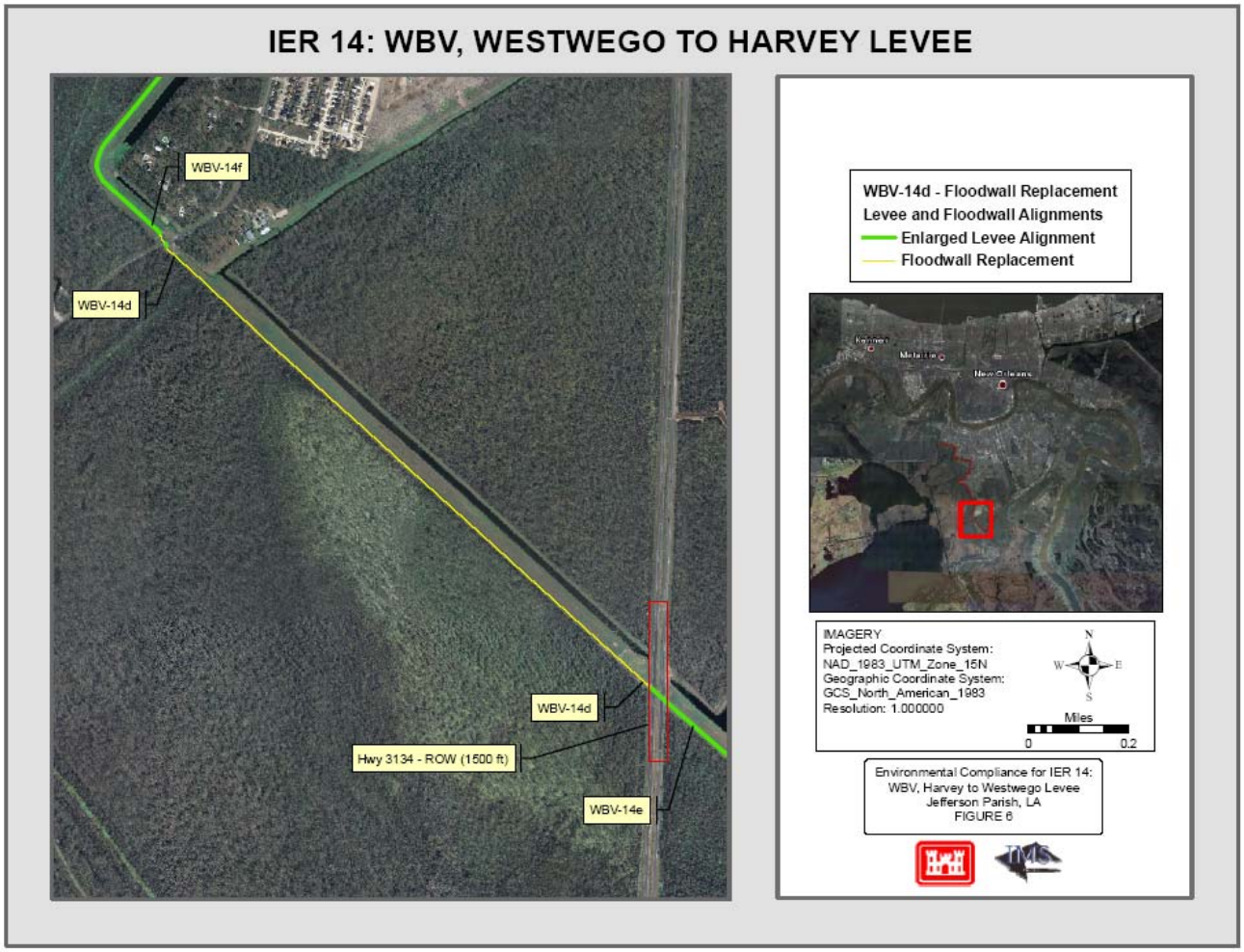

Figure 6: WBV-14d: Proposed Action

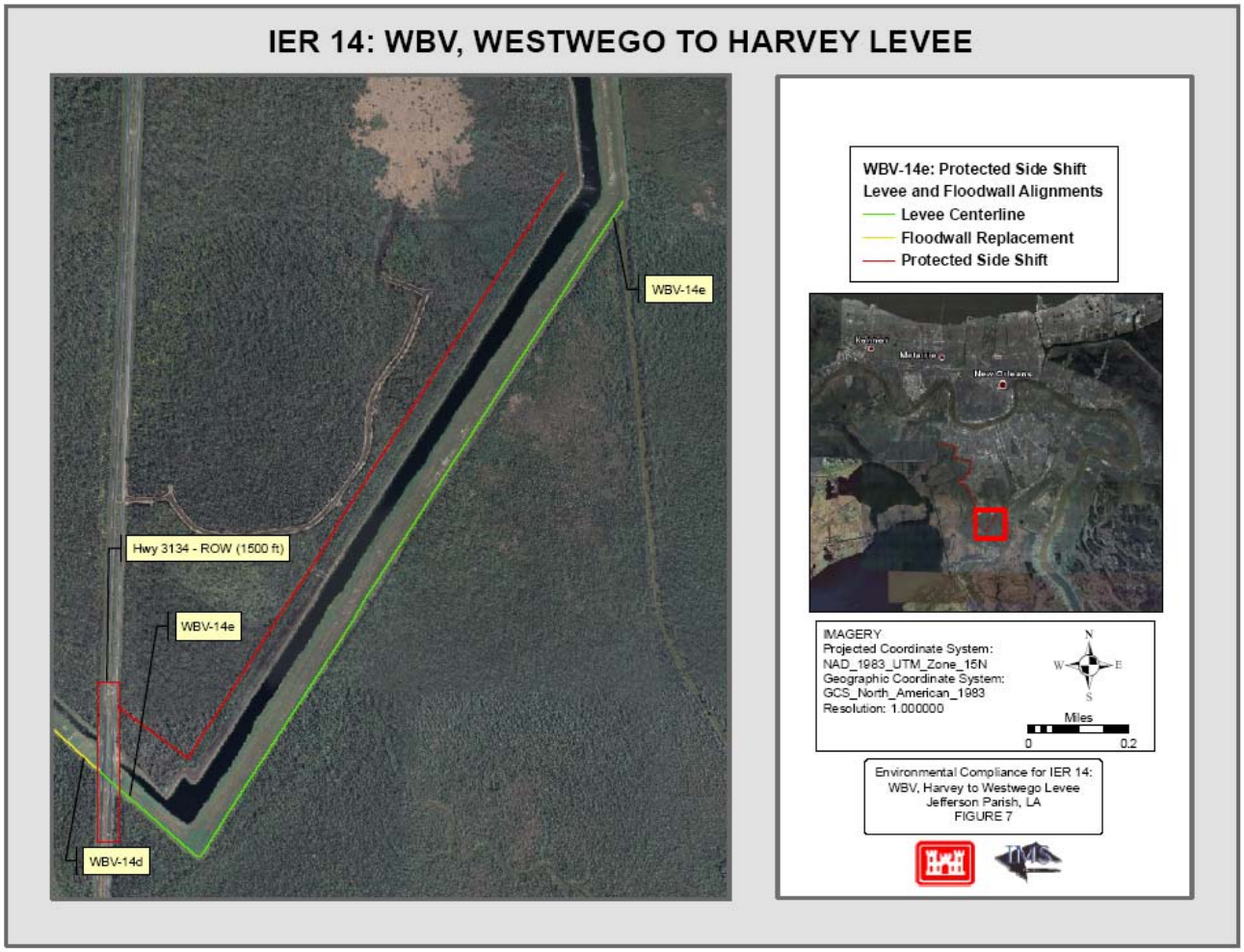

Figure 7: WBV-14e: Proposed Action

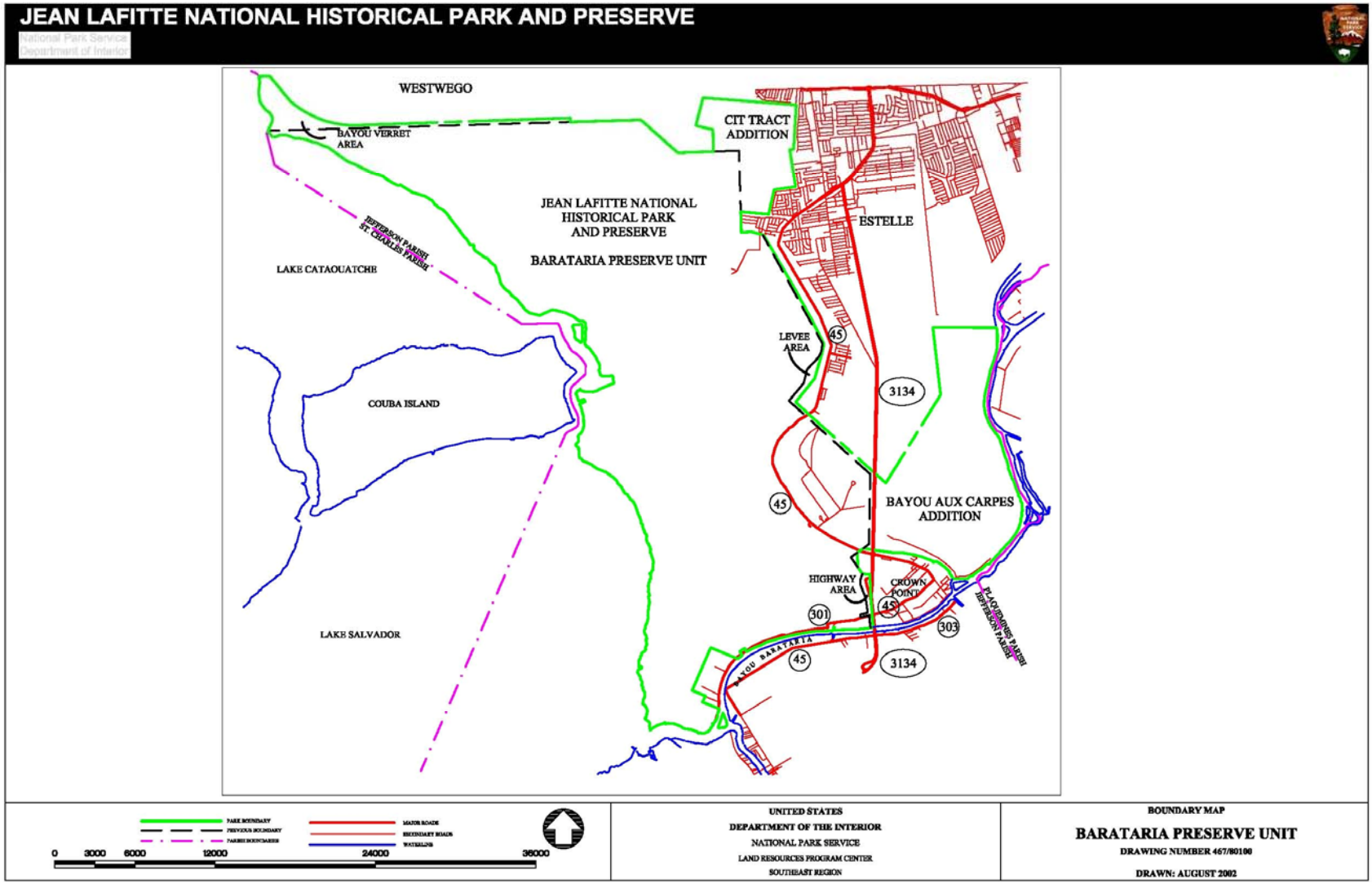

Figure 8: Jean Lafitte National Historical Park and Preserve

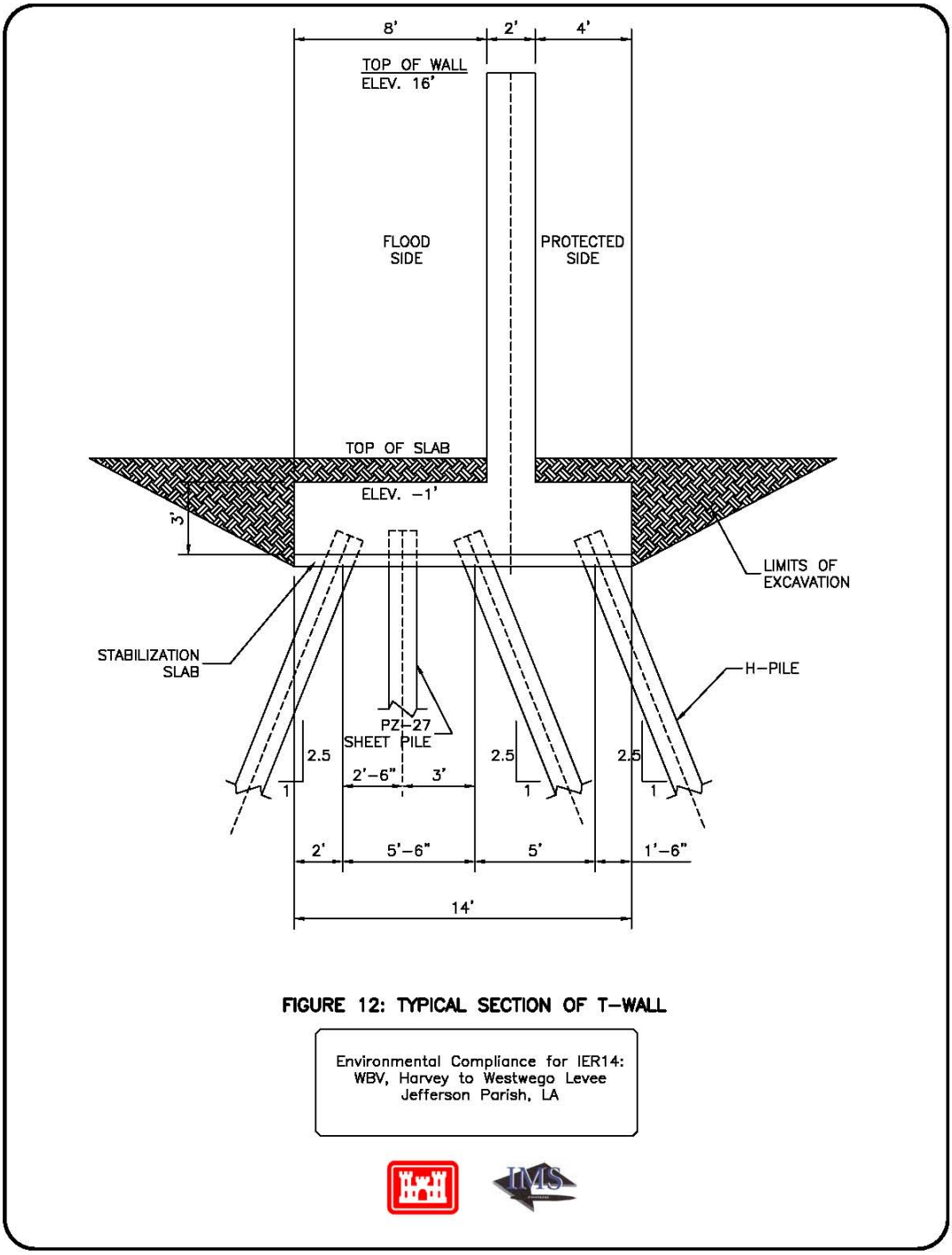

Figure 9: Typical Section of Floodwall

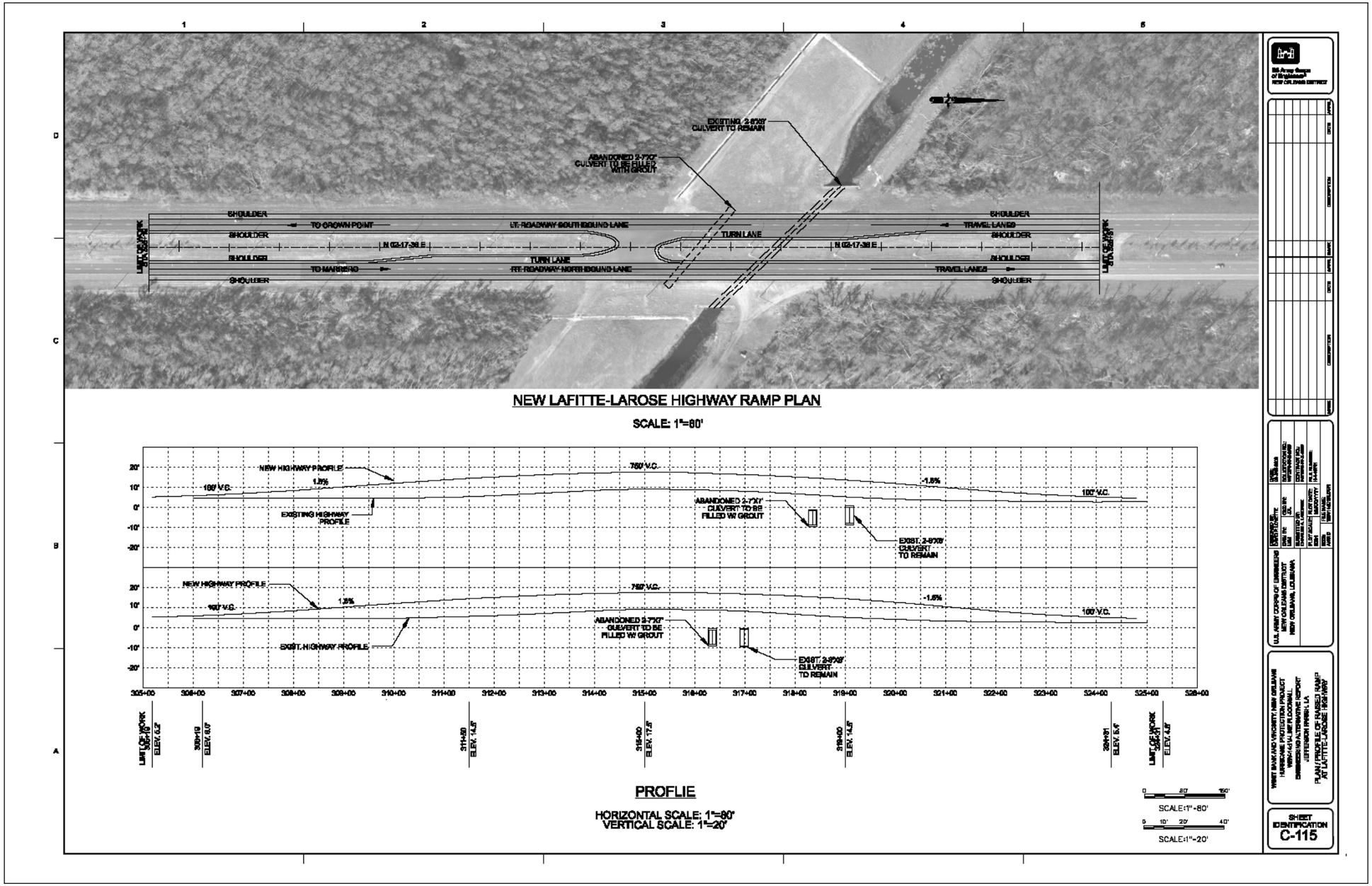

Figure 10: New Lafitte-Larose Highway Ramp Plan